TYPHON

TERROR XIX

Use and Maintenance Instructions



Model:TYPH-19

Foreword

This instruction manual is a guide for the proper use and maintenance of the machine. It should always be kept in the cab.

If damaged or lost, please immediately obtain a new manual from your dealer.

 Warn!

Do not operate this machine or perform any maintenance or repairs before carefully reading and thoroughly understanding the contents of this instruction manual. Correct maintenance and usage methods are crucial for the safety, reliability, and operability of the machine. The maintenance and operating procedures described in this manual are the most effective methods for operating and performing maintenance work. Following these instructions helps ensure the effectiveness, economy, and reliability of the equipment and maintenance. Carefully read the relevant sections of the "Cautions" and "Warnings" in this manual to minimize the risk of personal injury and damage to the machine or unsafe conditions caused by improper maintenance.

This instruction manual has been adapted to suit all markets. However, optional and special equipment for different markets is not included, as such equipment may not be suitable for your machine. We reserve the right to make changes and improvements to the product's technical parameters, specifications, design, operation, and maintenance instructions, and also reserve the right to improve or supplement such products without prior notice.

Safety rules

Always operate and use this machine in accordance with the relevant regulations of the state, province, autonomous region, and government authorities. Therefore, the operational safety information contained in this instruction manual is merely a suggestion. The following symbols, appearing together with the text in this instruction manual, have the following meanings:

 Warn!

Warning! Stay alert! Your safety is at stake!

Ignoring this hazard could result in an accident, serious injury, or death.

Operators are responsible for ensuring all warning signs are intact and legible on the machine. Failure to do so could very likely lead to an accident.

Familiarize yourself with the machine's functions and limitations.

 Warn!

Before operating the machine, the excavator operator must possess sufficient operating skills and have thoroughly read the instruction manual.

Untrained operators may cause serious injury or death.

Never use a machine without an instruction manual. Before operating this machine, familiarize yourself with all warning signs and symbols on the machine, as well as the machine's instruction manual.

Table of contents

Preface **1**

Safety rules **3**

I. Introduction **7**

(1) Overview 8

(2) Information and warning signs 12

(3) Maintenance and Repair 19

(4) Instrumentation and control system 23

(5) Controller 35

(6) Security Locking System 39

(7) Operator's chair 41

(8) Seat belts 43

II. Operating Instructions **45**

(1) Safety and responsibility 56

(2) Transportation of machinery 68

(3) Lifting machine 73

(4) Replace the bucket 74

(5) Before operation 76

(6) Start switch 80

(7) Start the engine 82

(8) Operating the machine 83

(9) After the operation 88

(10) Parking the machine 90

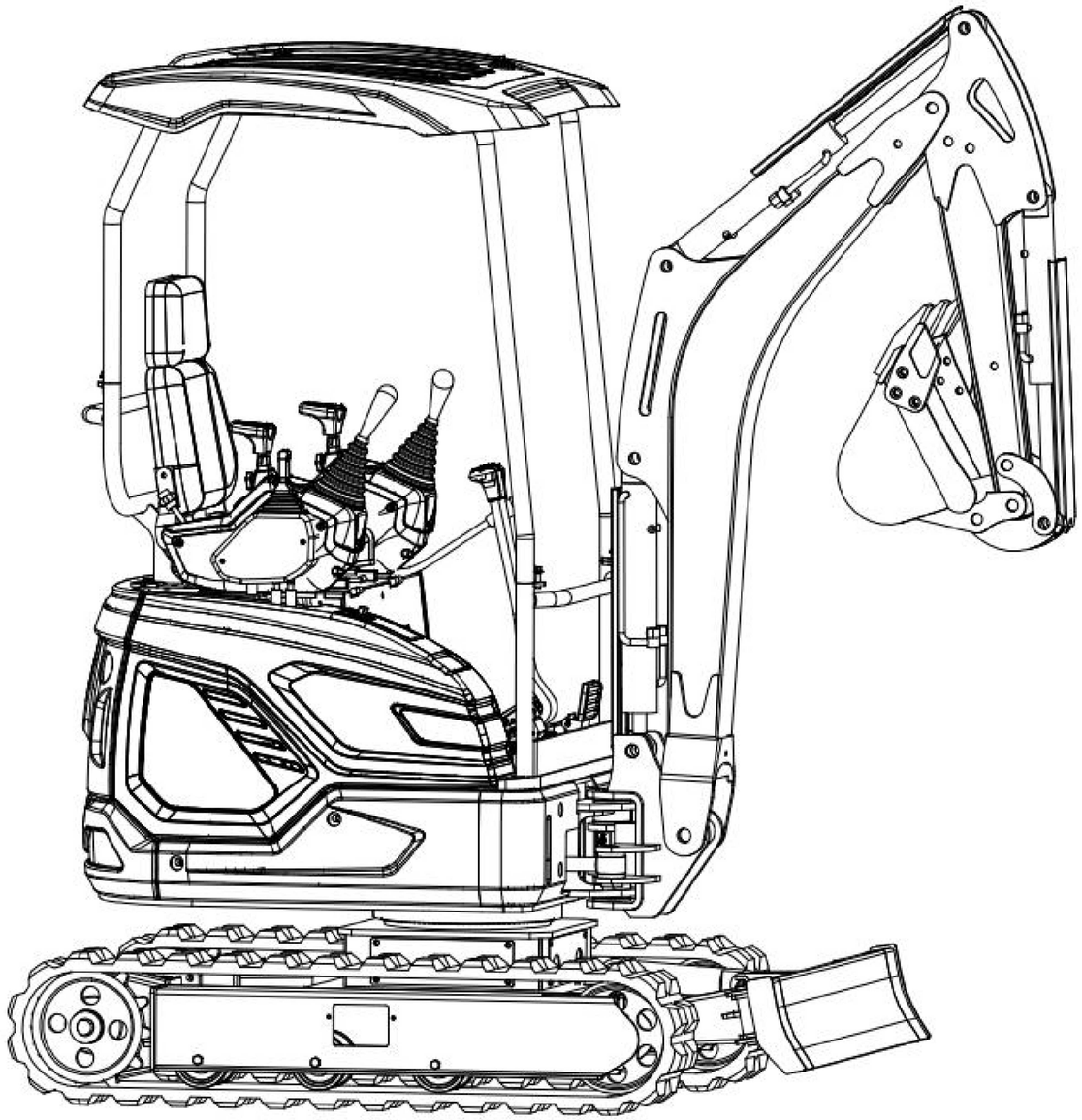
(11) Working with a bucket 92

(12) Exit from the muddy ground 94

(13) Optional components 95

III. Location of Repair 104
(1) Preventive measures 110
(2) Storage battery 118
(3) Air conditioning 123
(4) Engine 126
(5) Fuel system 132
(6) Air filter 136
(7) Cooling system 140
(8) Electrical system 145
(9) Hydraulic system 150
(10) Rotary drive 156
(11) Add and replace grease 158
(12) Track tension 163
(13) Adjustment of bucket clearance 165
(14) Lubrication 167

I. Introduction



(1)Overview

Intended Use

The various uses of this machine described in this instruction manual are under normal conditions. If used for other purposes or in potentially hazardous environments, such as areas with flammable or explosive materials or dust containing asbestos, special regulations must be followed, and the machine must be equipped with appropriate devices for the intended use. For detailed information, please contact the manufacturer or distributor.

Engine

Project	Unit	Specification	
Engine Model		D722-E4B-SXN-1	D902-E4B-CBH-1
Engine code		1J323-24000	1J325-27000
Type		Vertical, water-cooled, 4-cycle IDI diesel engine	Vertical, water-cooled, 4-cycle IDI diesel engine
Number of cylinders		3	3
Cylinder inner diameter	mm	67.0	72
Journey	mm	68.0	73.6
Combustion type		Spherical（E-TVCS）	Spherical（E-TVCS）
Total displacement	L	0.719	0.898
Power Speed（SAE J1995，	kW/rpm	10.2 / 2500 (13.9 / 2500)	11.8 / 2300 (16.1 / 2300)

Maximum torque	(PS/rpm)	42.9 / 2000	51.3 /1800
Maximum idle speed	N-m / rpm	Less than 28,000 (total amount)	Less than 2670 (total amount)
Minimum idle speed	rpm	1200~1300	1275~1375
Launch sequence	rpm	1-2-3	1-2-3
Rotation direction		Counterclockwise (viewed from the flywheel side)	Counterclockwise (viewed from the flywheel side)
Jet pump		Bosch MD mini pump	Bosch MD mini pump
Fuel injection pressure	Mpa (kgf/cm2)	13.7 (140)	13.7 (140)
Fuel injection timing	deg.	18.0 Before T.D.C (High pressure over-flow method)	16.0 TDC 之前
Compression ratio		23.5	24.0
Speed controller type		Full-speed mechanical governor	Full-speed mechanical governor
Fuel		Diesel No. 2-D	Diesel No. 2-D
Startup System		Battery starter (with glow plug)	Battery starter (with glow plug)
Start output	V-kW	12 - 1.4	12 - 1.4
AC generator output	V - A	12 - 40	12 -40
Cooling system		Pressurized radiator with forced circulation via water pump	Pressurized radiator with forced circulation via water pump
Lubrication system		Forced lubrication with a cycloidal pump	Forced lubrication with a cycloidal pump
lubricating oil		It is recommended to use CF grade lubricants according to API classification.	It is recommended to use CF grade lubricants according to API classification.
Lubricating oil capacity	L	3.8	3.7
Dimensions (length x width x height)	mm	Please refer to the dimension drawing.	Please refer to the dimension drawing.
Side PTO		-	

Emissions regulations		EPA/CARB TiAl4/Eu StiPeV/中国 GB3	EPA/CARB TiAl4/Eu StiPeV/中国 GB3
Intake resistance	kPa(mmAq)	≦ 2.45 (250)	≦ 2.45(250)
Exhaust back pressure	kPa(mmHg)	≦ 9.33 (70)	≦ 9.33 (70)
Engine cooling requirements	kcal/h	9,180	10700
Intake volume (at 25°C and 750 mmHg atmospheric pressure)	m3/min	0.78	0.90
Exhaust volume (under conditions of 25℃ and 750 mmHg atmospheric pressure)	m3/min	1.93	2.16
Net weight	kg	Approx. 65	72

Electrical System

The electrical system includes the engine starting system, charging system, overall machine monitoring system, engine-pump control system, and air conditioning system. Engine speed is controlled by a series of progressively increasing buttons and an automatic idle system. The automatic idle and speed-up system automatically reduces engine speed 5 seconds or more after the machine stops operating, and simultaneously increases engine speed to the set speed within 0.1 seconds of detecting an operation signal.

Hydraulic Pump

The hydraulic pump assembly consists of two fixed displacement gear pumps connected by a spline, both driven by the engine. The pump comprises a vane assembly and a housing. The flow rate output by the main pump is determined by the engine's output power.

Main Control Valve

The control valve consists of an 8-valve assembly, including 4 valves for the excavating device, 2 valves for continuous travel, one valve for rotation, one valve for optional devices, a main relief valve, several outlet relief valves, and a check valve.

Travel Motor

The travel motor is either a cycloidal motor or a piston motor, with pressure compensation function. This motor has a large output torque and can withstand high radial loads.

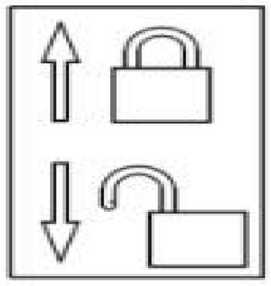
Steering Motor

This cycloidal hydraulic motor features pressure compensation and boasts high output torque and the ability to withstand significant radial loads. Its dual-bearing support structure allows it to withstand substantial radial forces. The integrated flange and housing design enables it to withstand frequent reversing impacts. Utilizing a toothed stator-rotor pair, it offers smooth operation, a long service life, and high operating pressure. It features low starting pressure, convenient reversing, and can be used in series or parallel within hydraulic systems.

(2) Information and warning signs

The following are the warnings, messages, and text descriptions that can be found on the machine:

Security Lockout



Warning! It's rotating, do not approach.

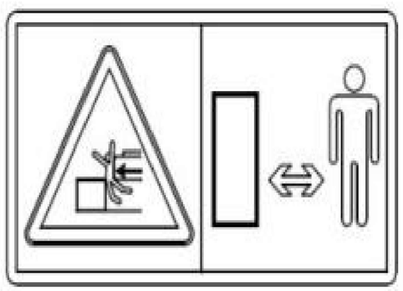


Warning! The coolant is very hot and pressurized. Take precautions to avoid burns.

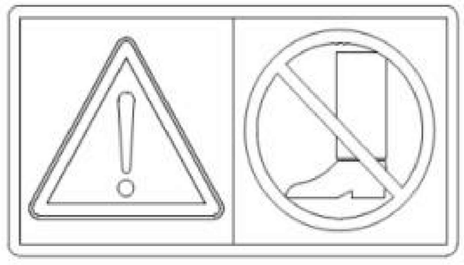


Keep away from the sign.

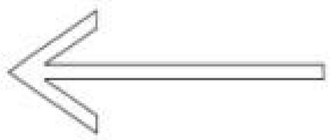
Do not approach within the rotation radius.



Warning! Do not step on this area to prevent slipping and falling.



Walking direction



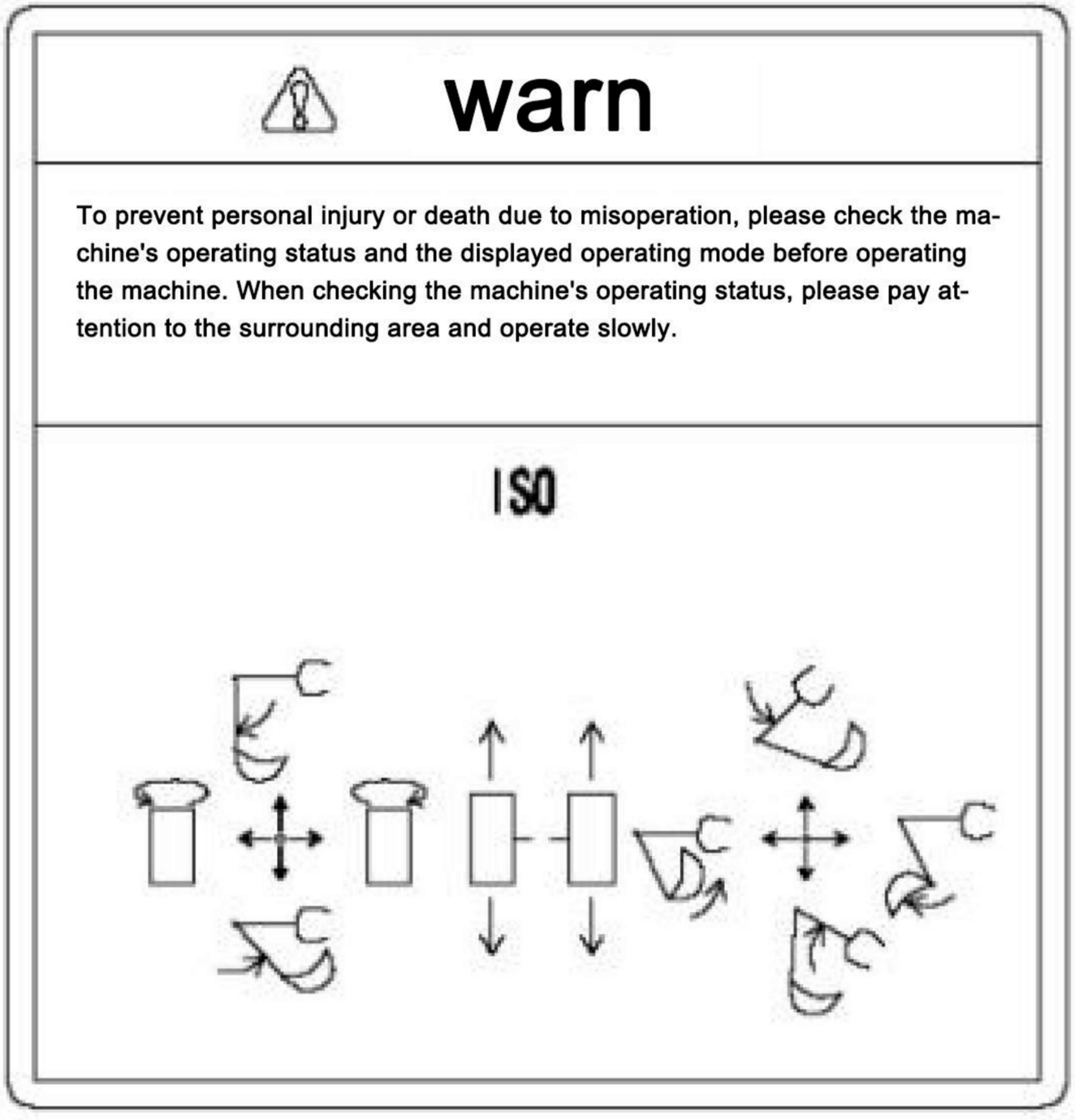
Keep away from the excavator's work area marked with signs. Do not approach.



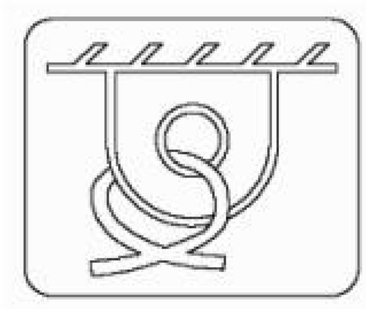
Notice

- Before operating the vehicle, you must read the "Instruction Manual" carefully.
- Before starting the vehicle, a check should be performed, and the vehicle should not be started if there are any safety concerns.
- Workers must be aware of the safe distance from high-voltage lines.
- Before leaving the driver's seat, the following must be observed:
  Lower the working device to the ground;
  Lock the control lever with the safety lock and stop the engine;
  When using the boom or stick to lift the vehicle, personnel must not enter under the vehicle;
  When parking on a slope, stop blocks must be placed under the tracks;
- When adjusting track tension, the valve must not be loosened more than one turn; exceeding this may cause the internal high-pressure grease to spray out.
  When stopping the engine, allow it to idle at minimum throttle for 5 minutes before stopping.
- When removing and reassembling a hydraulic cylinder or part of the circulation system, air must be purged according to the following procedure:
  1. Let the engine idle at low speed.
  2. Initially, extend and retract the cylinder piston 4-5 times, stopping the piston 100 mm from the end of the stroke.
  3. Then move each cylinder piston to the end of the stroke 3-4 times.
- For track adjustment, please refer to the "Instruction Manual".
- After a long period of parking, the following procedure must be followed when starting the engine:
  1. Turn the engine start switch to the "ON" position.
- 2. Start the engine.
  Select the appropriate engine oil according to the ambient temperature; please refer to the "Instruction Manual".

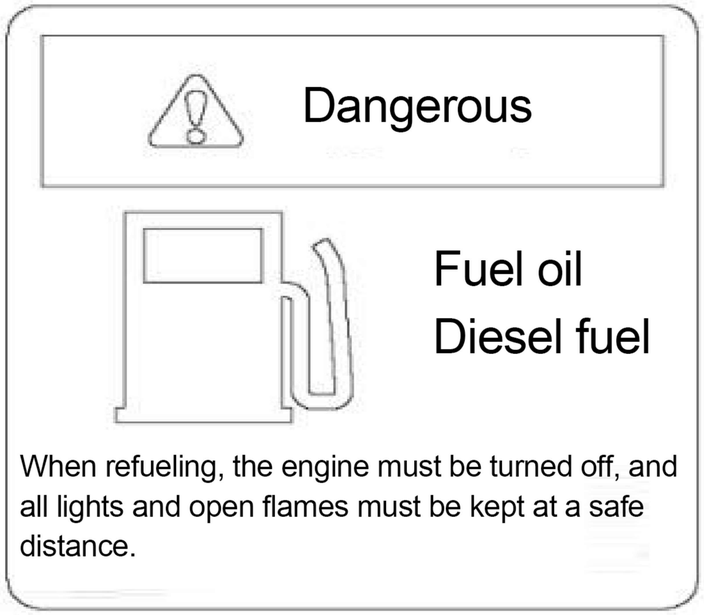
Operational Instructions



Lifting and fixing position



Warning! Flammable and explosive, keep away from fire.



(3) Maintenance and Repair

Summary

To minimize the cost of the machinery used, proper maintenance and repair are essential. Maintenance and repair intervals apply to machines operating under normal environmental and working conditions. Repairs described in the instruction manual can be performed by the operator; further adjustments and repairs should be carried out by authorized service centers or the manufacturer.

Delivery Inspection

The machine has undergone the necessary tests and adjustments before leaving the factory. According to this manual, the dealer should conduct a further "delivery inspection" before delivering the machine to the user.

Warranty Inspection

Regular inspections of the machine are important during the initial stages of operation. Inspections include: checking the tightness of all bolts, comparing set values with actual values and making minor adjustments. Therefore, follow-up

inspections are conducted in three phases: the first after 500 hours, the second after 1000 hours, and the third after 2000 hours. Our company reserves the right to change these inspection schedules without prior notice.

General Use of Off-Highway Engines

This maintenance guide assumes the machine is used as specified in the Instruction Manual and only the designated fuel and lubricant are used.

Off-Highway Engine Repair

Off-highway engines are conventionally designed, and any local dealer can perform the off-highway engine emission control repairs outlined in this manual.

Users are particularly advised to follow the off-highway engine repair guidelines in the "Basic Preventive Maintenance" section. This includes repairs to the engine emission control system. To ensure written documentation of all scheduled maintenance, we recommend users retain all repair records and receipts. These records and receipts should be provided to all users who purchased the off-highway engine.

Services Provided by Local Dealers

Local dealers are equipped with genuine parts from the manufacturer, specialized tools, the latest technical information, and well-trained repair technicians, enabling them to provide you with high-quality, reliable service. Please inform your local dealer of your repair service requirements. They will develop a customized repair plan based on your needs. For regular maintenance and repairs, it is best to contact your local dealer in advance to agree on a time and schedule the necessary equipment and technicians to perform the repairs on your machine, in order to ensure and improve the utilization rate of your machine.

Preventive Maintenance and Care Plan

To maintain engine reliability, noise levels, and emissions control, it is crucial to perform regular engine maintenance, inspection, adjustment, and repair.

Fuel System

Recommendations regarding fuel:

The fuel used must be clean, safely distilled, stable, and non-corrosive. When selecting fuel to achieve optimal combustion efficiency and minimal wear, distillation range, cetane number, and sulfur content are the most important factors. Regarding cold characteristics and cetane number, engine operating conditions and ambient temperature influence fuel selection. In cold climates, such as temperatures below 0°C, it is best to use a lighter distillation or a higher cetane number (final boiling temperature 349°C and minimum cetane number 45).

To avoid excessive precipitation and minimize sulfur dioxide emissions in exhaust gases, low-sulfur fuel should be selected. It is recommended that the diesel fuel used in the engine meet the requirements of ASTM: D975 No. 1 (C-B) or No. 2D (T-T) with a cetane number of not less than 42 and a sulfur content of not more than 0.5% by weight.

Check for fuel leaks.

With the engine idling at a higher speed, visually inspect all fuel connections and hoses.

Inspect fuel hoses.

- Aging
- Cracks
- Bubbling
- Wear

Inspect fuel tank condition

- Drain condensate
- Inspect cracks and damage
- Inspect installation
- Inspect for leaks

(4) Instrumentation and control system

Overview

 Warn!

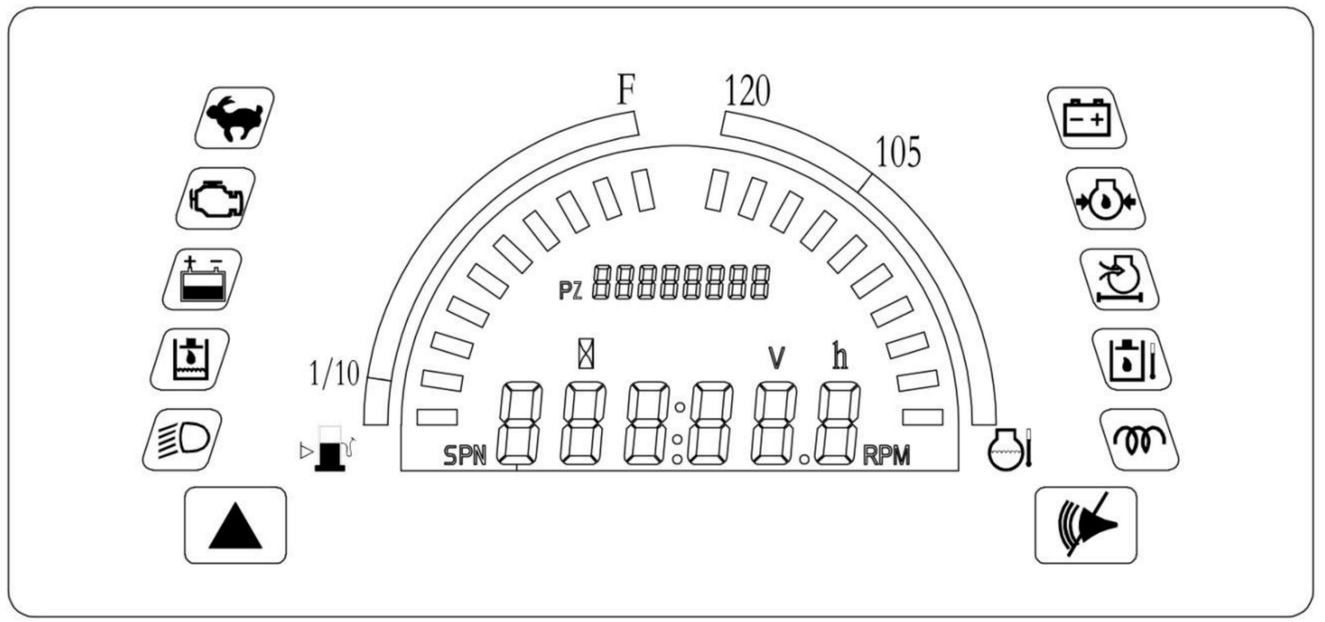
Before operating the machine, carefully read and familiarize yourself with the location, function, and usage of the instruments and control controllers. Regularly check the information displayed on the instruments and take appropriate measures to prevent machine damage.

This excavator uses the LDW-3.4 series electronic monitor. This monitor upgrades the parameter display from LED strips to an LCD screen, and integrates switch alarms, significantly saving space in the left and right armrest boxes. The monitor uses a full-screen LCD display with a 180-degree viewing angle. Dynamic drive is used, reducing drive components and reserving ample space for multi-functionality. The LDW-3.4 series electronic monitor features real-time engine speed feedback display (optional), as well as engine coolant temperature, oil pressure, and other parameters, allowing the

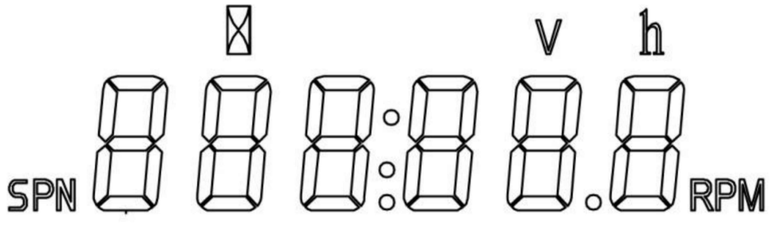
operator to accurately understand the engine's operating status. The monitor also displays fuel level (optional) and hydraulic oil temperature, enabling the detection of overall vehicle pressure parameters and providing a crucial foundation for optimal vehicle operation.

Detailed Explanation of Instrument Functions

Main interface



Diagrammatic Analysis



The numbers displayed here are for switching between some parameters, such as current time, working time, engine speed, and for engines that meet China III emission standards, engine fault codes (SPN codes) will also be displayed.

The "SPN" display area shows the SPN code currently received by the system.

The "V" display area shows the current system voltage value.

The "h" display area shows the current operating time.

The "RPM" display area shows the current rotational speed value.

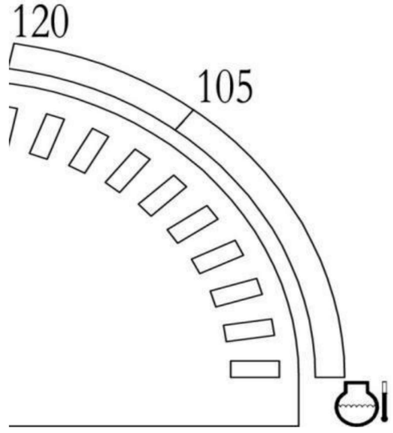
1. Working Time (RPM) Display

1-1 Total working time of the entire machine, timed in units of 0.1 hours (counts every 6 minutes; less than 6 minutes are not counted in the total time).

1-2 RPM display: When the engine speed is >500 RPM, the timer position is displayed. The RPM and timer are displayed alternately (every 5 seconds).

1-3 If the ECU of the matching Euro III electronic fuel injection engine is faulty, the engine SPN code will be continuously displayed here to remind the driver to analyze and handle the fault.

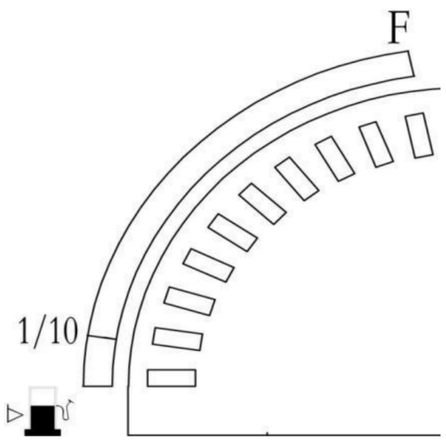
2. Cooling water temperature display



Displays the current engine operating temperature. The light-emitting diode (LED) display provides a more intuitive understanding of the coolant temperature. If the temperature gauge shows a range of 40 ℃ -102 ℃ , the coolant

temperature is normal during operation. If the temperature gauge shows a temperature exceeding 102℃, it indicates overheating, and the engine coolant temperature alarm icon will appear, accompanied by an audible alarm from the monitor. In this case, immediately stop the engine or reduce the engine speed to idle and check the coolant condition. Coolant temperature parameters are read via CAN communication!

3.Fuel level display



The left-hand indicator is the fuel level display area.

It indicates the amount of fuel in the tank. If the fuel level is normal during operation, the indicator will show two or more

bars (including two). If only one bar is displayed during operation, the fuel level alarm indicator will flash, and the monitor will sound an alarm, indicating that the fuel level in the tank is low and fuel should be checked and refueled promptly.

Appendix 1: Fuel Quantity Sensor Parameter Table (Standard)

Technical parameters (buoy descends to the bottom, then rises for testing)		
Oil level gauge setting (H)	Range	Resistance value（Ω）
52	Full	3
82	16/17	9.8
112	15/17	16.6
142	14/17	23.4
172	13/17	30.2
202	12/17	37
232	11/17	43.8
262	10/17	50.6
292	9/17	57.4
322	8/17	64.2
352	7/17	71
382	6/17	77.8
412	5/17	84.6
442	4/17	91.4
472	3/17	98.2
502	2/17	105
532	1/17	110.8
＞532	0位	118.3

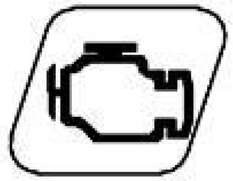
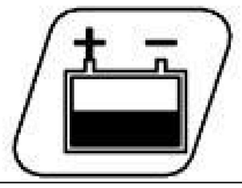
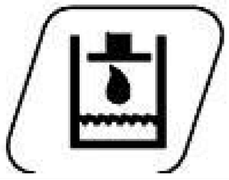
4. Hydraulic Oil Temperature Display

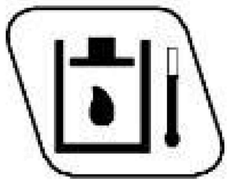
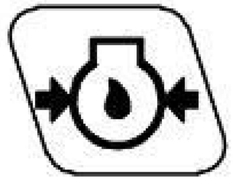
Displays the current hydraulic oil operating temperature. The hydraulic oil temperature parameter is acquired by the microcontroller as an analog signal, and the display is a digital indicator light. If the water temperature exceeds 85℃ during operation, the hydraulic oil temperature alarm indicator will flash and the monitor will sound an alarm. In this case, immediately stop the machine or reduce the engine speed to idle and check the hydraulic oil condition.

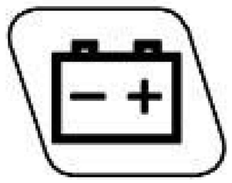
Appendix 2 Oil Temperature Sensor Parameter Table (Standard)

Temperature（℃）	50	60	80	100	110	120	140
	226	153	76	40.4	30.3	23	16

5. Instructions for Commonly Used Switch Quantities

	Instrument alarm mute button
	Engine malfunction warning indicator
	Battery low voltage alarm
	Engine oil-water separation fault warning indicator
	Headlight indicator

	Air filter alarm indicator
	Hydraulic oil temperature alarm indicator
	This symbol indicates the engine oil pressure status. When the engine oil pressure is normal, this symbol is not displayed. When the engine oil pressure is abnormal, indicating low oil pressure, the oil pressure alarm icon will appear, and the monitor will issue an audible and visual alarm. In this case, you should immediately stop the engine and check the engine oil condition.
	High and low speed display

	Preheating Indicator
	This symbol indicates the generator's operating status. When the generator is operating normally, this symbol remains lit. When the generator is malfunctioning and not charging, this symbol will not be displayed. In this case, the generator's operating status should be checked.

Diagnosis and Troubleshooting of Common Faults:

Quick and Simple Troubleshooting Methods for Checking the Monitor's Functionality:

1. When the starter switch is turned to the "ON" position, the instrument panel should perform a 5-second self-test. If this does not occur, the monitor itself may be faulty.

2. When the engine is running, a constantly lit charging indicator light indicates that the alternator is working normally. If the charging indicator light is off or flashing while the alternator is running, the alternator is not working, indicating a faulty

alternator or poor wiring contact.

3. Use the short-circuit method to quickly determine if the "oil temperature and fuel level" gauges on the instrument panel are functioning correctly:

No Fuel Level Indicator:

Disconnect the fuel level sensor connector and momentarily ground the connector at the wiring harness end. Observe whether the fuel level display on the monitor is fully lit. If it is, the monitor is normal, and the fuel sensor is faulty.

Notes and Explanations

The above describes the main screen and operation steps of the entire monitor system. The following points should be noted during operation:

1. There is a certain delay to prevent accidental operation.

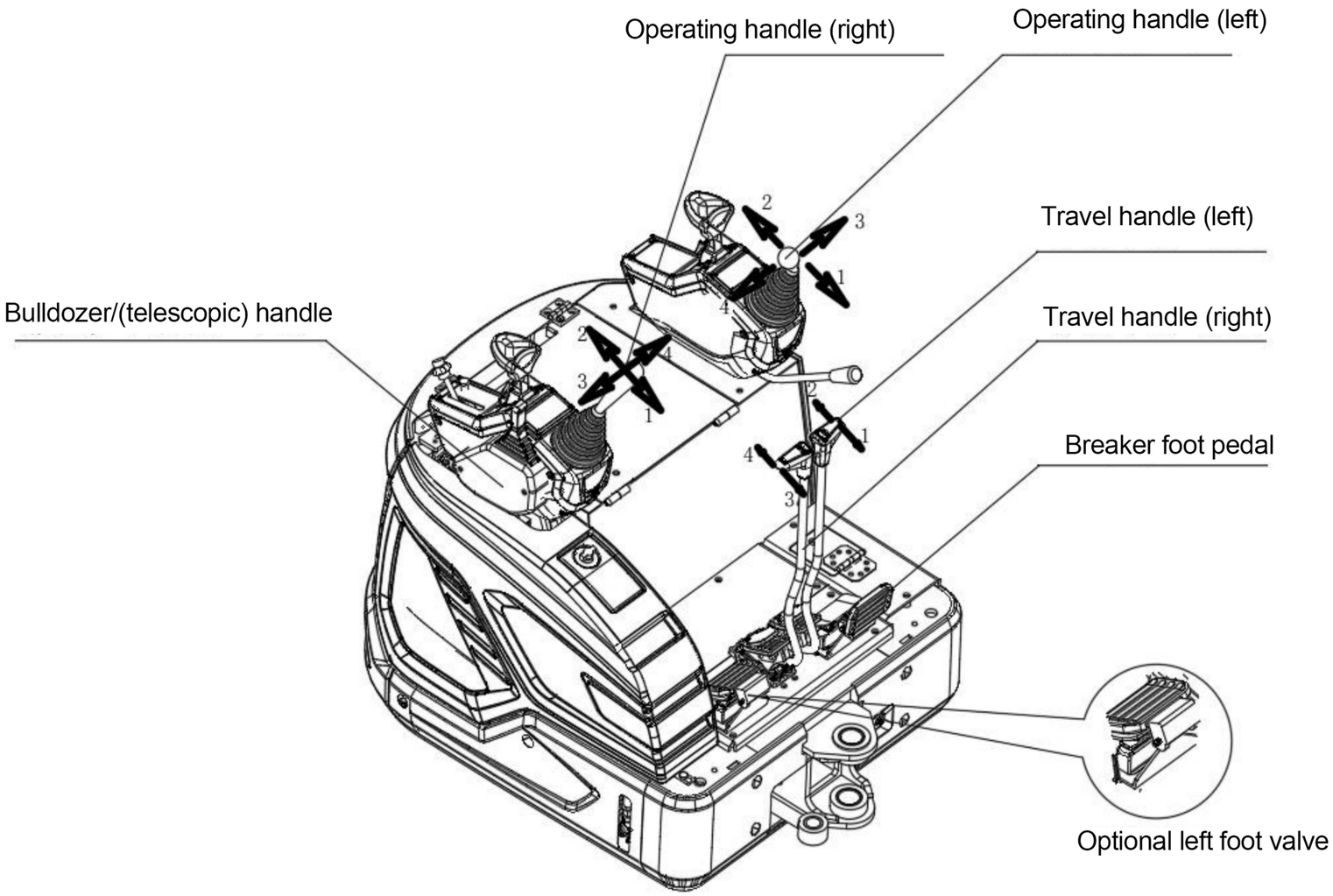
2. Pressing two buttons simultaneously will have no effect.

3. There is a certain adjustment time for button switching functions during button operation; frequent operation is prohibited.

4. Always wait for the system self-check after turning the key before starting the machine.

Note: (Optional) This function may or may not be present depending on the model and stage.

(5) Controller



1. Control Handle (Left): Used for slewing (press and hold the button at the top of the handle to swing the boom to the side) and stick control.

· 1 Stick extension;

· 2 Stick retraction;

· 3 Left slewing (press and hold the button at the top of the handle to swing the boom to the left);

· 4 Right slewing (press and hold the button at the top of the handle to swing the boom to the right);

2. Control Handle (Right): Used for boom and bucket control.

· 1 Boom lower;

· 2 Boom raise;

· 3 Bucket tilt;

· 4 Bucket retraction;

3.Travel Handle

 Warn!

Do not step on the walking pedals while working. When operating the walking handle/pedal, ensure the track is moving in the correct direction. If the drive wheels are in front, the walking operation sequence is reversed.

· 1 3 Forward;

· 2 4 Reverse;

· 1 Right turn;

· 3 Left turn;

Simultaneous operation of 1 and 4, or 2 and 3, allows for turning on the spot.

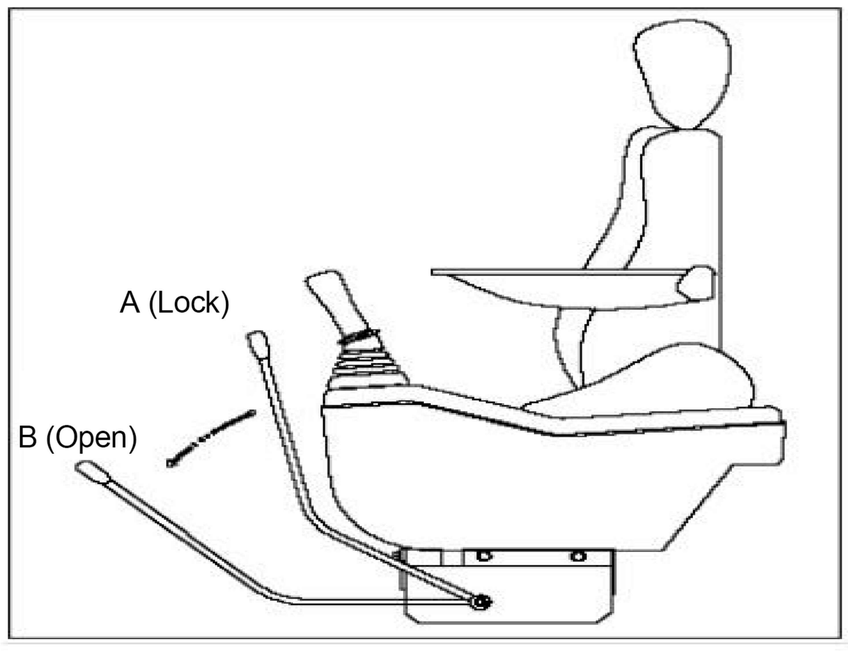
4. Breaker Foot Pedal: Used for operating the breaker.

5. Bulldozer/(Telescopic) Handle Valve: Used for moving the bulldozer blade up and down. (Or telescopic chassis telescopic function)

(6) Security Locking System

Warn!

Remember to raise the safety locking lever before starting work. If the safety locking lever is not in the "locked" A position, accidentally touching the control lever will cause the machine to start, which may cause serious injury.



Safety Locking Handle

A - Locked Position (The engine can be started when the safety locking lever is in this position)

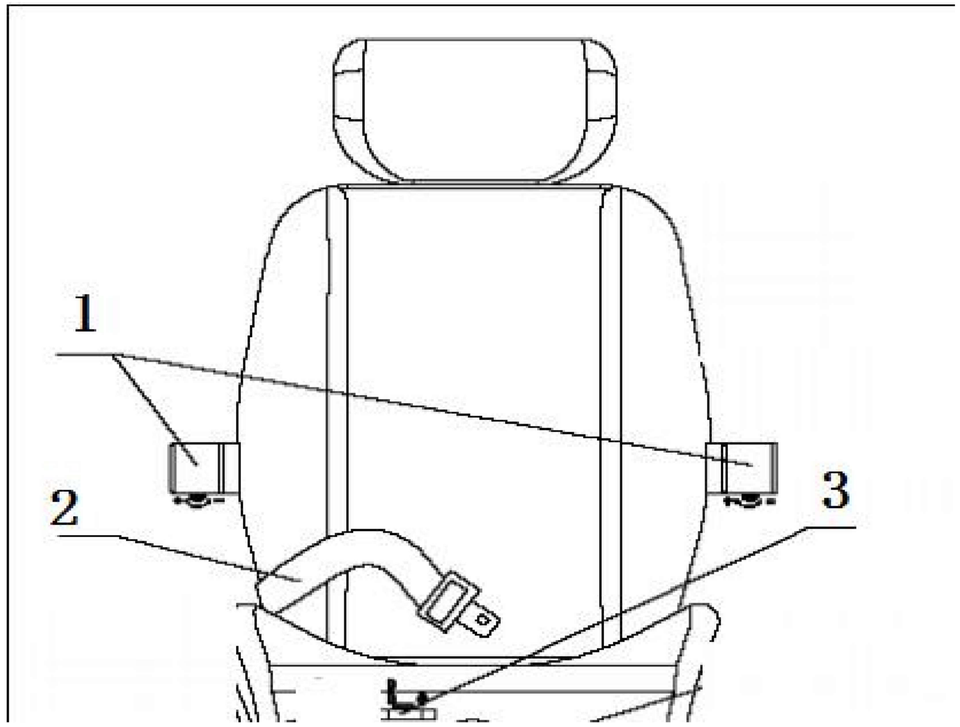
B - Open Position (The engine cannot be started when the safety locking lever is in this position) This system is used to lock the working device, slewing mechanism, and traveling mechanism.

When the safety locking lever is in position A (locked), all control levers are disabled, and the engine can only be started in this position.

(7) Operator's chair

Warn!

It is designed for one person only. Do not adjust the seat while digging, and avoid moving parts.



1. Armrest height adjustment

2. Seat belt

3.Seat fore-aft adjustment: Lift this handle upwards to adjust the seat position forwards and backwards.

(8) Seat belts

 Warn!

If the seatbelt is worn, damaged, or deformed due to an accident, it should be replaced immediately.

- If the seatbelt needs cleaning:

· Use a neutral soap solution.

· Allow it to dry fully stretched before rolling it up.

· Ensure the seatbelt is installed correctly.

- No modifications to the seatbelt or its support are permitted.

- The seatbelt is for the use of only one adult.

- The seatbelt must be replaced every 2 years, regardless of whether it is used.

II.Operating Instructions

Introduction

This chapter contains regulations concerning operation and safety, which must be followed to ensure the correct and safe operation of the machine. However, compliance with these regulations does not mean that operators can disregard the responsibilities and obligations stipulated by national, provincial, and municipal laws and regulations concerning transportation safety, traffic safety, industry safety, and welfare.

Overview

Important!

Frequently check the pressure and temperature of the hydraulic oil. During the first 50 hours of break-in, operate the machine with caution. This will increase the hardness and smoothness of all bearing surfaces, thereby significantly extending their service life. The following are instructions regarding the applicable break-in and interval periods during the break-in period.

Engine Regular Maintenance Checklist

Item	Maintenance Interval												
	50 Hours	75 Hours	100 Hours	150 Hours	200 Hours	400 Hours	500 Hours	1 or 2 Months	1 Year	800 Hours	1500 Hours	3000 Hours	2 Years
* Inspect fuel hoses and clamps	☆												
Change engine oil	(1) Oil pan depth (101 mm, 3.98 in.)	★	☆										
	(2) Oil pan depth (121 mm, 4.76 in.)	★		☆									
	(3) Extended oil pan depth (101 mm, 3.98 in.)	★		☆									
Inspect fan belt tension and damage			☆										
* Clean air filter element (Replace the element after cleaning 6 times)			☆										
Clean fuel filter (element type)			☆										
Inspect battery electrolyte level			☆										
Replace oil filter element	(1) Oil pan depth (101 mm, 3.98 in.)	★			☆								
	(2) Oil pan depth (121 mm, 4.76 in.)	★				☆							
	(3) Extended oil pan depth (101 mm, 3.98 in.)	★				☆							
Inspect radiator hoses and clamps					☆								
* Inspect intake lines					☆								
* Replace fuel filter						☆							
Clean inside of water hose and radiator							☆						
Replace fan belt							☆						

Notes:(1) This oil pan depth is an optional value for Z482-E3B and D722-E3B.(2) This oil pan depth is the standard value for Z482-E3B, D722-E3B and D782-E3B.(3) This oil pan depth is the standard value for Z602-E3B and D902-E3B.★ Please change the engine oil and oil filter element after the initial 50 hours of operation.* According to the U.S. EPA non-road engine emission standards, the above items (marked with *) are listed by Kubota as important components related to emissions. As the owner of the engine, you are responsible for performing the necessary maintenance on the engine as described above.

Item	Maintenance Interval												
	50 Hours	75 Hours	100 Hours	150 Hours	200 Hours	400 Hours	500 Hours	1 or 2 Months	1 Year	800 Hours	1500 Hours	3000 Hours	2 Years
Recharge the battery								☆					
* Replace air filter element									☆				
Inspect valve clearance										☆			
* Inspect injector condition											☆		
* Inspect fuel injection timing												☆	
* Inspect injection pump												☆	
* Replace intake lines													☆
Replace battery													☆
Replace radiator hoses and clamps													☆
* Replace fuel hoses and clamps													☆
Replace radiator coolant (long-life coolant)													☆

* According to the U.S. EPA non-road engine emission standards, the above items (marked with *) are listed by Kubota as important components related to emissions. As the owner of the engine, you are responsible for performing the necessary maintenance on the engine as described above.

Engine Lubrication and Cooling System Precautions

1. Overview

The cooling system removes the heat generated by combustion in the combustion chamber and the friction of moving parts, enabling the engine to operate continuously within the normal temperature range.

[Coolant Flow]

The cooling system cools the running engine to prevent overheating and maintain the normal operating temperature.Kubota engines adopt a pressurized, forced circulation cooling system.This system includes a radiator (1), water pump (2), cooling fan (3), thermostat (4), and coolant temperature sensor (for some models).The coolant is cooled by the radiator. The fan installed behind the radiator draws cooling air into the radiator core to improve the cooling effect.When the coolant temperature reaches the valve opening temperature of the thermostat (4), the thermostat (4) opens the valve to allow the heated coolant to flow back to the radiator (1).The water pump (2) draws in the cooled coolant, presses it into the cylinder block (6), and sucks out the hot coolant. The 03-M, 07, and V3 series engines adopt a bottom bypass system to improve the cooling performance of the radiator and a three-stage valve-opening thermostat to thoroughly reduce thermal shock.

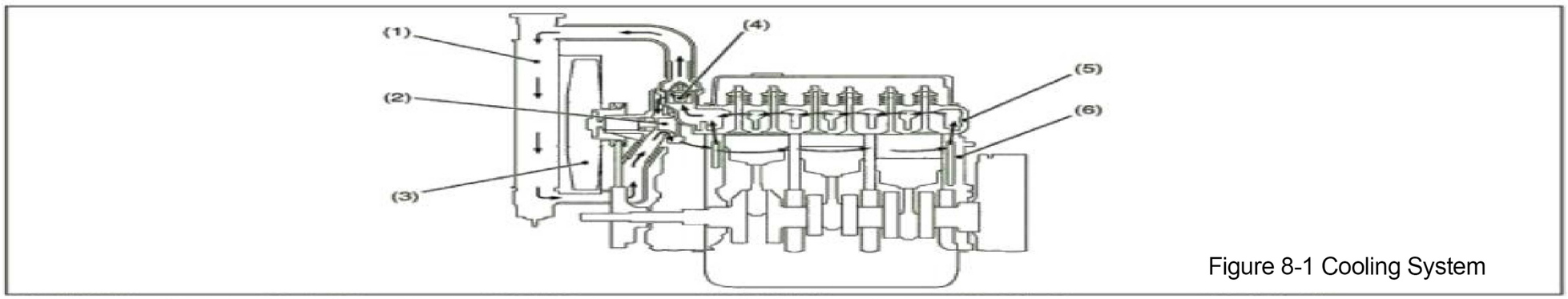
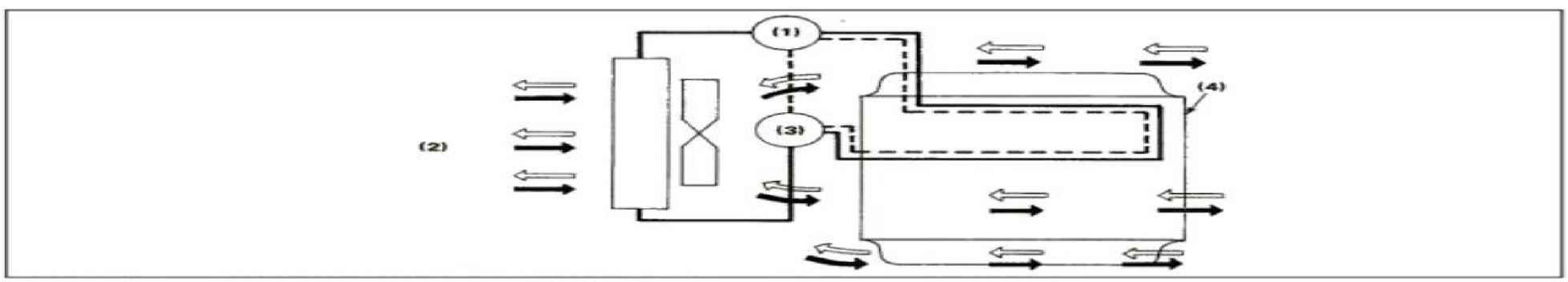


Figure 8-1 Cooling System

(1) Radiator(2) Water Pump(3) Fan(4) Thermostat(5) Cylinder Head(6) Cylinder Block



(1) Thermostat(2) Cooled Air (via blow-type fan ←) (via suction-type fan →)(3) Pump(4) Engine

9. Cooling System Precautions

(1) Prevent Air Trapping

If air is trapped in the cooling system at connection points, it may lead to abnormal boiling, reduced pump performance, local overheating, and other issues. This may cause the coolant to be lost due to air expansion and other problems.Connections must be carefully inspected. Similarly, a faulty cylinder head gasket may lead to exhaust gas intrusion.

(2) Radiator Surface Cleaning

The radiator surface is quite important for the overall cooling performance. If the surface becomes dirty, it may cause overheating. Sometimes, a dust screen is installed at the front of the radiator, and a scraper is installed to automatically clean the radiator surface according to actual conditions.

(3) Radiator Support

If the engine is installed on a mobile vehicle, the radiator must be properly supported to prevent vibration and impact.Figure 8-24 shows a typical radiator installation situation.

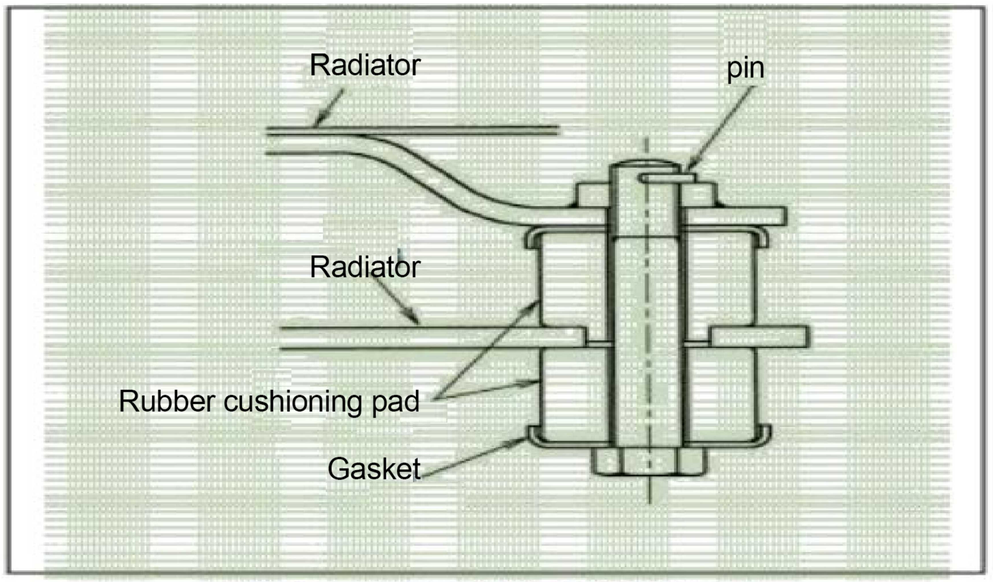
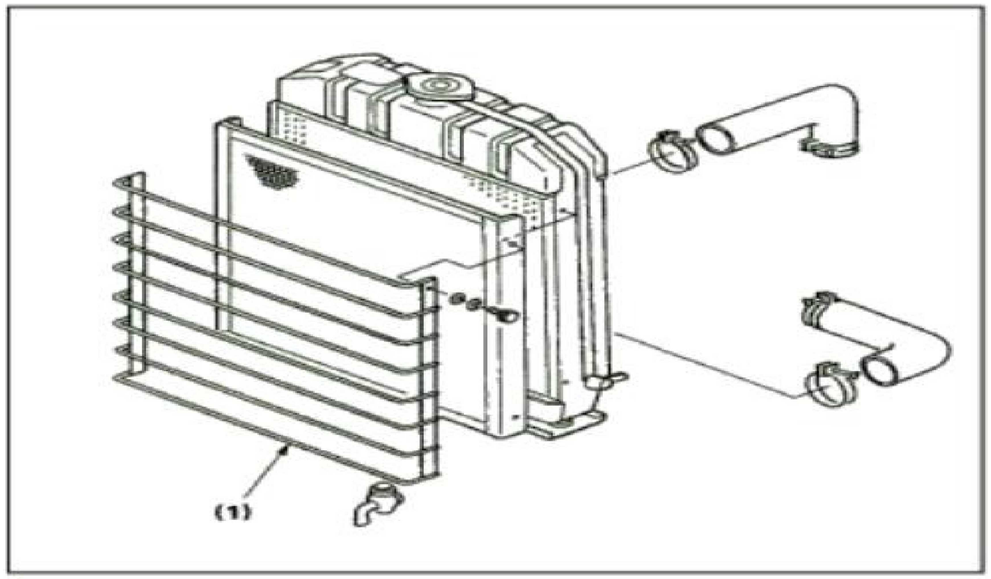


Figure 8-24 Typical Installation Example of Kubota Radiator

Note:Please use the upper bracket according to the vibration level.

(4) Radiator Protection

If the radiator surface is directly exposed, a protective frame should be installed around it.Figure 8-25 is a typical example.

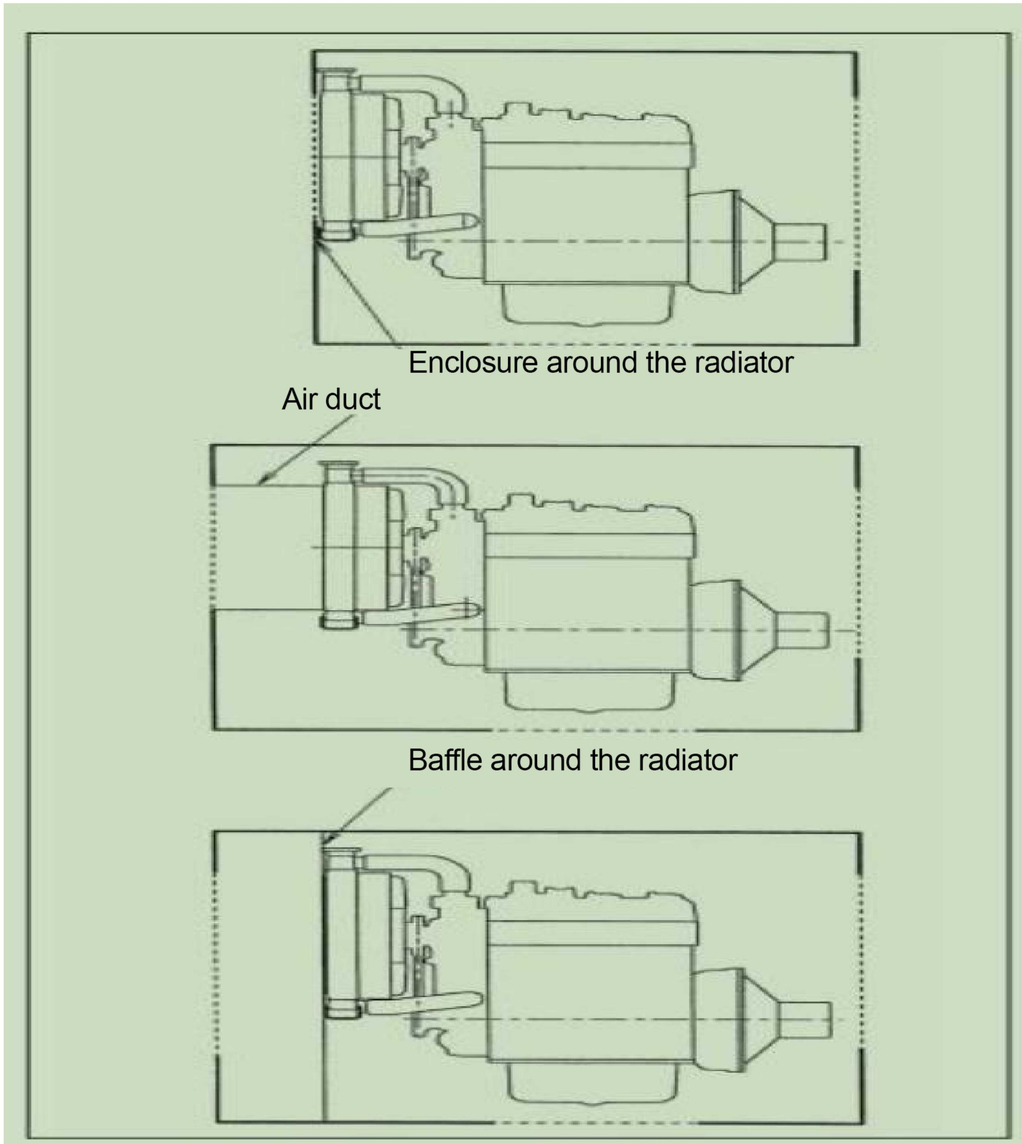


(1) Protective Frame

Figure 8-25

(5) Prevent Air Recirculation

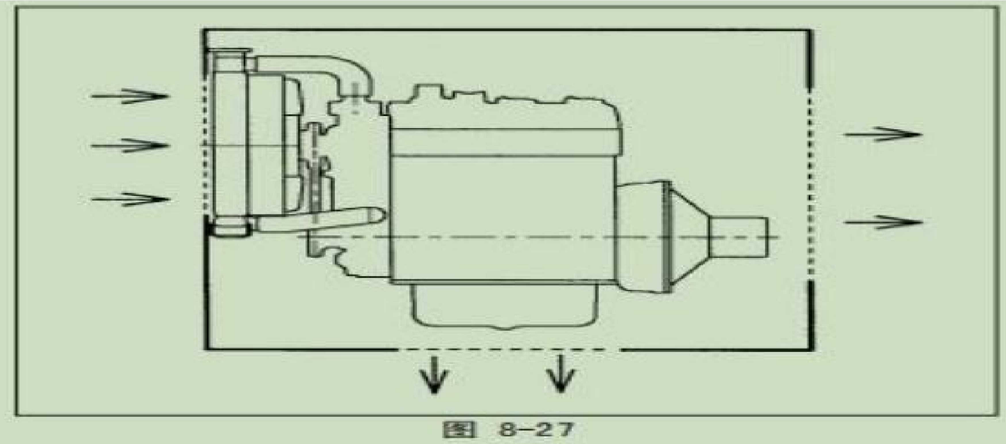
To achieve the best cooling effect, it is crucial to draw cold air into the radiator. Therefore, when designing the engine compartment, appropriate barriers and air ducts must be considered around the radiator to prevent hot air recirculation. The following are engine compartment design examples.



(6) Airflow Inlet and Outlet

Sufficient airflow inlet and outlet opening area should be ensured to prevent airflow reduction. The opening area should be at least equal to or larger than the area of the radiator core.

Openings at the bottom of the engine compartment are an effective way to reduce oil temperature.


图 8-27

Lubrication System

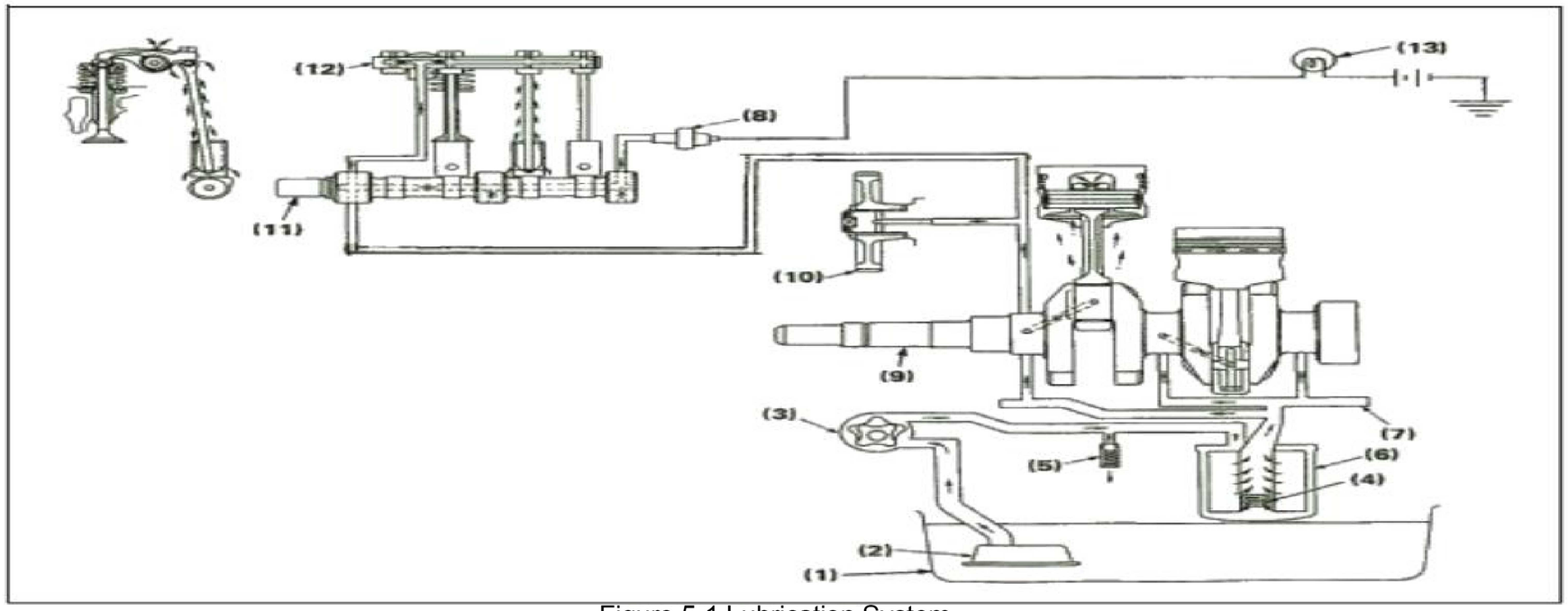
1. Overview

To ensure the normal operation of various moving parts of the engine, lubrication must be performed on them. For this purpose, a large amount of lubricating oil circulates in the engine. Its functions are as follows: In addition to reducing friction, the lubricating oil also cools the engine, controls the expansion and displacement of bearing surfaces, seals, prevents rust and corrosion, prevents dust, and purifies the incomplete combustion products generated in the cylinder.

[1] Lubrication System

A typical lubrication system is shown in Figure 5-1. That is, the lubricating oil in the oil pan flows cyclically throughout the system in the direction indicated by the arrows in the figure under the action of the oil pump. Before flowing back to the oil pan, the lubricating oil is always delivered to various parts of the engine under a pressure of 245~343kPa (2.5~3.5kgf/cm², 35.6~49.8psi).

There are two main oil passages. One is the oil passage along the crankshaft to the crankpin journal, and the other is the oil passage along the inner wall of the crankcase to the valve rocker shaft. If the oil pressure drops for some reason, causing damage to the components of the lubrication system or other problems. Depending on the engine type, when the oil pressure drops to 49.03kPa (0.5kgf/cm², 7.11psi) or below 98.06kPa (1.0kgf/cm², 14.22psi), the warning indicator light will illuminate to indicate an oil pressure drop phenomenon.



(1) Oil pan
(2) Oil filter 1
(3) Oil pump
(4) Bypass valve
(5) Valve
(6) Oil filter 2
(7) Oil passage
(8) Oil switch
(9) Crankshaft
(10) Camshaft
(11) Camshaft
(12) Rocker shaft
(13) Warning indicator light

Figure 5-1 Lubrication System

This diesel engine lubrication system is composed of an oil pan (1), an oil filter 1 (2), an oil pump (3), a valve (5), an oil filter 2 (6), and an oil switch (8). The cooled oil in the oil pan (1) first flows through the oil filter 1 (2) under the suction action of the oil pump, and then flows into the oil filter 2 (6) after being pressurized by the cycloid pump (3) to filter out the fine particles therein. Then, the oil is forcibly delivered to the crankshaft (9), connecting rod, camshaft (10), camshaft (11), and rocker shaft (12) through the oil passage (7) (the oil passage in the crankcase) for lubrication.

The oil flows down through the gaps between the components under the action of the oil pump, thereby completing the lubrication of the piston, cylinder connecting rod small end, fuel camshaft, tappet, push rod, intake/exhaust valve, and timing gear.

2. Lubricating Oil
Note:
It is recommended not to use synthetic oil.
Inferior oil will shorten the service life of the engine.
Please only use the specified lubricating oil.
[1] Functions of Engine Oil
(1) Anti-friction FunctionThe primary function of engine oil is to prevent component seizure and reduce friction, thereby minimizing wear on moving parts and contact surfaces (such as cylinder walls and piston rings, crankshafts, camshafts, connecting rods, etc.) caused by friction to the greatest extent possible.
(2) Cooling FunctionIn addition to lubricating the friction parts of the piston, engine oil also acts as a heat transfer medium to cool the engine. The temperature of the combustion chamber is usually very high. The cooling function is a crucial function. Excessively high viscosity of engine oil or insufficient supply will lead to insufficient cooling capacity, which in turn causes seizure.
(3) Sealing FunctionThe combustion chamber achieves sealing through the cooperation of the cylinder and the compression ring to ensure the smooth progress of the compression process. The role of engine oil is to form a layer of sealing oil film in the gap between the cylinder wall and the piston ring (to ensure better sealing effect), prevent compressed air from leaking (to maintain a certain compression pressure), and prevent combustion gas from entering the oil pan, thereby preventing insufficient fuel combustion from causing a decrease in engine output power and engine oil pollution.
(4) Cleaning FunctionLubricating oil can remove deposits in the engine, thereby preventing seizure caused by deposit accumulation.
(5) Anti-corrosion FunctionEngine oil can prevent metal parts such as bearings from acidic corrosion.
(6) Anti-rust FunctionEngine oil can prevent rust caused by the condensation of acidic gases.

[2] Classification of Lubricating Oil
(1) Categories by ViscosityViscosity grades are classified according to SAE (Society of Automotive Engineers) standards. Viscosity is an important characteristic of engine oil. The higher the viscosity, the thicker the oil film formed on the metal surface; conversely, the thinner. Viscosity changes with temperature; the higher the temperature, the lower the viscosity; conversely, the higher. Engine oil should have an appropriate viscosity, and its viscosity should be less affected by temperature changes. In other words, engine oil must have a high viscosity index. Multi-grade engine oil (SAE 10W-30) has excellent lubricating performance under both low and high temperature conditions and is available all year round."High viscosity index" means that the viscosity of engine oil is less affected by temperature changes.

SAE J-300

Viscosity Grade	Maximum Viscosity (CP) at Temperature Condition	Maximum Temperature (°C (°F)) for Pumpability	Viscosity at 100°C (212°F)
			Minimum
0W	3250 at -30°C (-22°F)	238 (-35)	3.8
5W	3500 at -25°C (-13°F)	243 (-30)	3.8
10W	3500 at -20°C (-4°F)	248 (-25)	4.1
15W	3500 at -15°C (5°F)	253 (-20)	5.6
20W	4500 at -10°C (14°F)	258 (-15)	5.6
25W	6000 at -5°C (23°F)	263 (-10)	9.3
20	-	-	5.6
30	-	-	9.3
40	-	-	12.5
50	-	-	16.3

*Measured by CCS viscometer (ASTM D-2602 standard).
**Measured by micro rotational viscometer (ASTM D-3829 standard).
The maximum temperature is measured when the viscosity is less than 30000CP.

(2) Recommended oil for E3 specification engines

• For applicable oil grades (classified by the American Petroleum Institute (API), please refer to the table below, and determine the appropriate grade based on engine type (with internal EGR, external EGR, or without EGR) and type of fuel used:

(low sulfur, ultra-low sulfur, or high sulfur fuel).

Fuel Type	Engine oil grade (API grade)	
	Engines without EGR Engines with internal EGR	Engine with external EGR
High-sulfur fuel [0.05% (500ppm) < sulfur content < 0.50% (5000ppm)]	CF (If using "CF-4, 0G-4, CH-4, or CI-4" engine oil with high-sulfur fuel, change the oil at shorter intervals (about half the time).)	—
Low-sulfur fuel [sulfur content < 0.05% (500ppm)] or ultra-low-sulfur fuel [sulfur content < 0.0015% (15ppm)]	CF, CF-4, CG-4, 0H-4 or CI-4	CF or CI-4 (CF-4, CG-4, and CH-4 grade engine oils are not suitable for EGR engines.)

EGR: Exhaust Gas Recirculation.
CJ-4 grade engine oil is for engines equipped with DPF (Diesel Particulate Filter) and is not recommended for Kubota E3 specification engines.

Depending on the ambient temperature at which the engine is operating, the engine oil used should have the appropriate API rating and SAE viscosity.

Under current stringent emission control regulations, CF-4 and CG-4 engine oils are generally used with low-sulfur fuels and are primarily applied to on-road vehicle engines. If off-road vehicle engines operate on high-sulfur fuels, it is recommended to use an oil with a higher total base number (T Base Number) of "CF or higher" (recommended T Base Number of at least 10).

Hydraulic System

* The hydraulic return oil filter element, hydraulic oil suction filter element, and pilot oil filter element must be replaced after the first 250 hours.

* Thereafter, the return oil filter element and suction oil filter element should be replaced every 500 hours, and the pilot oil filter element should be replaced every 1000 hours.

* The lubricating oil in the rotary motor reducer and travel motor reducer should be changed after the first 500 hours.

* Thereafter, the lubricating oil in the rotary motor reducer should be changed every 1000 hours, and the lubricating oil in the travel motor reducer should be changed every 2000 hours.

(1)Safety and Responsibility

Operator's Responsibilities

Operators are responsible for understanding the potential hazards of their work area and the specific requirements for machinery operation and personnel safety. This is essential to preventing serious personal injury, property damage, and fatal accidents.

Other Personnel's Responsibilities

When operating the machine, any injury or accident must be avoided. Operators have the obligation and responsibility to prevent such accidents. While the machine is operating, no one may enter the machine's working area without notifying the operator. If someone must enter the machine's working area to perform certain tasks, they must exercise caution and not pass behind the machine or appear in the danger zone without cause. If anyone is in the machine's working area, the operator must exercise extreme caution and may only operate the machine after confirming the person's location.

Damage

Operators are responsible for reporting any damage or wear that jeopardizes the safe operation of the machine.

Operator Qualifications

 Warn!

Only trained and qualified personnel are permitted to operate the machines.

 Warn!

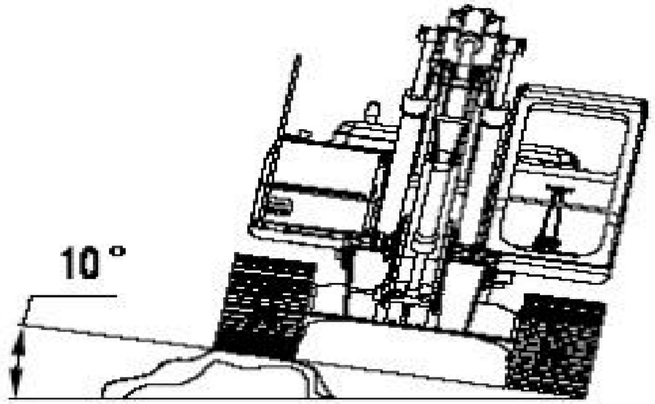
Do not linger on the working machine, as this will hinder the operator from operating the machine correctly and safely.

Basic Mechanical Knowledge

During machine inspection, maintenance, and repair, only personnel familiar with machine operation and instruments are permitted in the cab.

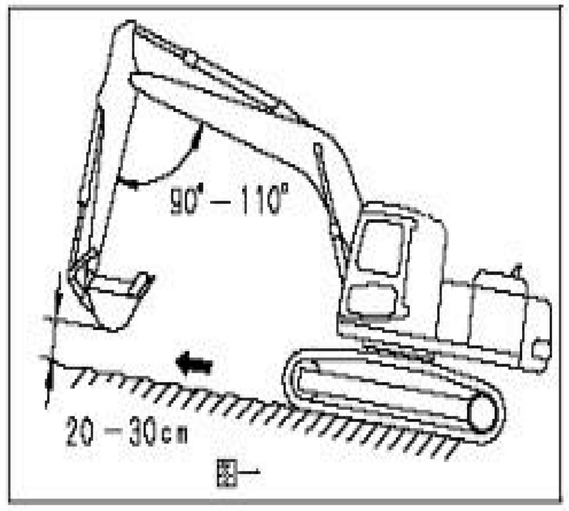
Precautions When Moving

On flat ground, the working device must be retracted and raised 40-50cm off the ground. When crossing obstacles such as gravel and tree stumps, the machine experiences significant impact; therefore, reduce speed, raise the bulldozer blade, and ensure the track center crosses the obstacle. Try to move these obstacles away or avoid crossing them altogether. When moving on uneven ground, the rightward tilt angle should not exceed 10 degrees during operation.

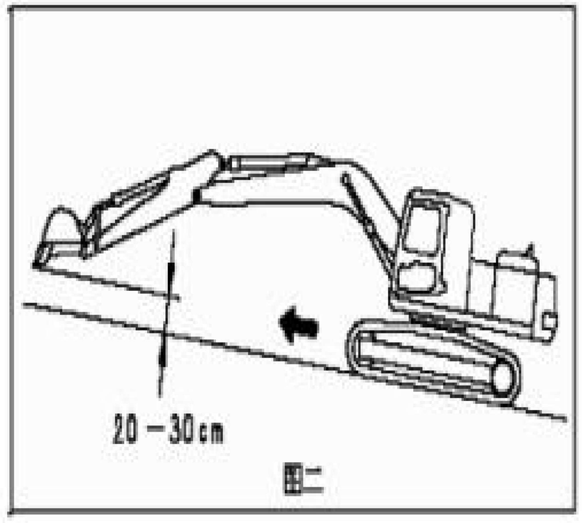


Precautions for Uphill Travel

Note: When traveling on a slope, adjust the working device to the position shown in Figure 1 below. In an emergency, the working device can be quickly lowered to the ground. When traveling uphill on a slope of 15 degrees or greater, adjust the working device to the position shown in Figure 2 below to improve balance and travel at a low speed. If the tracks slip, push the bucket into the soil to help the traveling mechanism push the machine uphill.

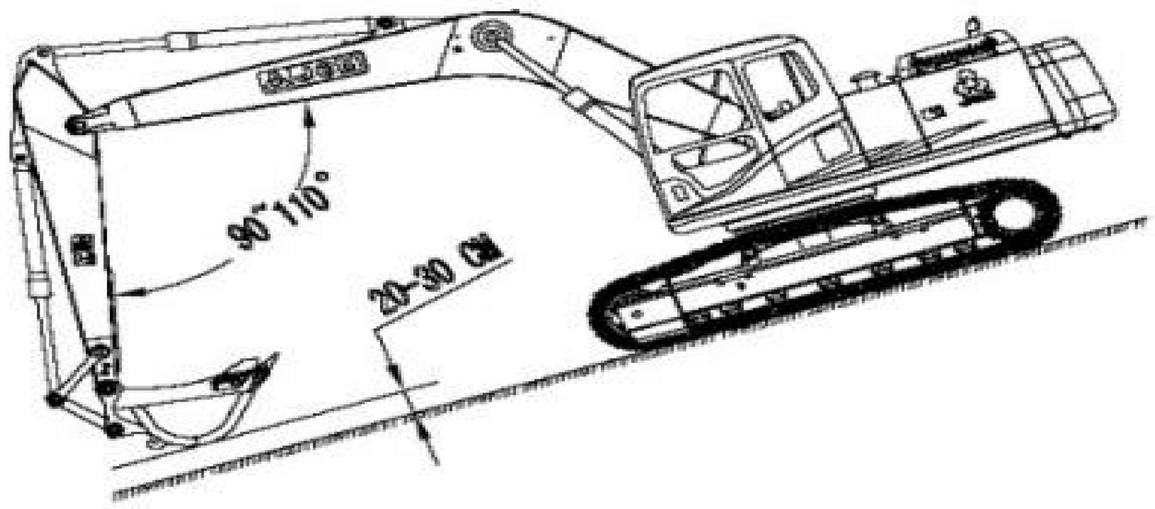


图一



图二

When moving downhill on a slope of 15 degrees or greater, the machine should be positioned as shown in the diagram below and moved at a low speed.



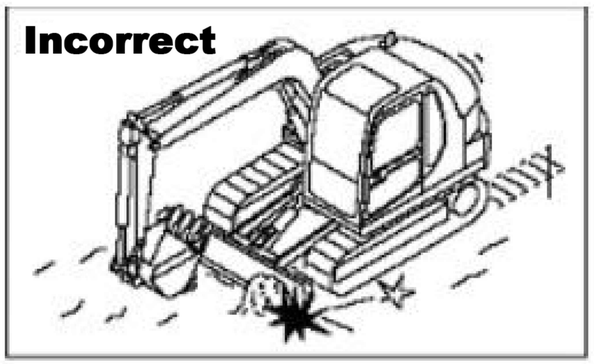
Never approach high-voltage lines.

Personnel could be electrocuted if the machine is near high-voltage lines. Even without direct contact, the danger is still present. If working near high-voltage lines, no one should approach the machine. Before working near high-voltage lines, contact the power company first. For safety, the following minimum distance must be maintained between the machine and the high-voltage lines. If the working device accidentally comes into contact with the power line, the operator must remain in the cab. If the machine is still operational, try to carefully move the working device away from the high-voltage line to avoid the risk of electric shock.

Voltage	Minimum distance from power lines:
0~1 kilovolt	2m (7 feet)
1~55 kilovolts	4m (13 feet)
55~500 kilovolts	6m (20 feet)

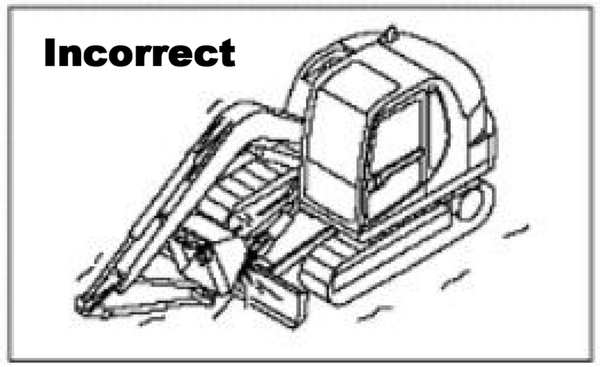
Avoid collisions with the bulldozer blade.

Note: Do not use the bulldozer blade to hit rocks or road shoulders, as this will cause premature damage to the bulldozer blade or hydraulic cylinder.



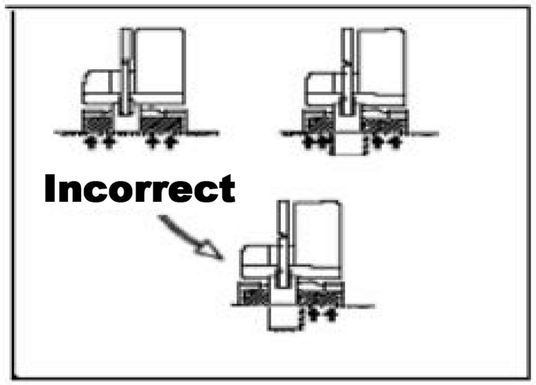
Retract the working device.

Note: When the working device is retracted into the walking or transport mode, be careful not to let the bucket touch the bulldozer blade.



Support the bulldozer blade on both sides.

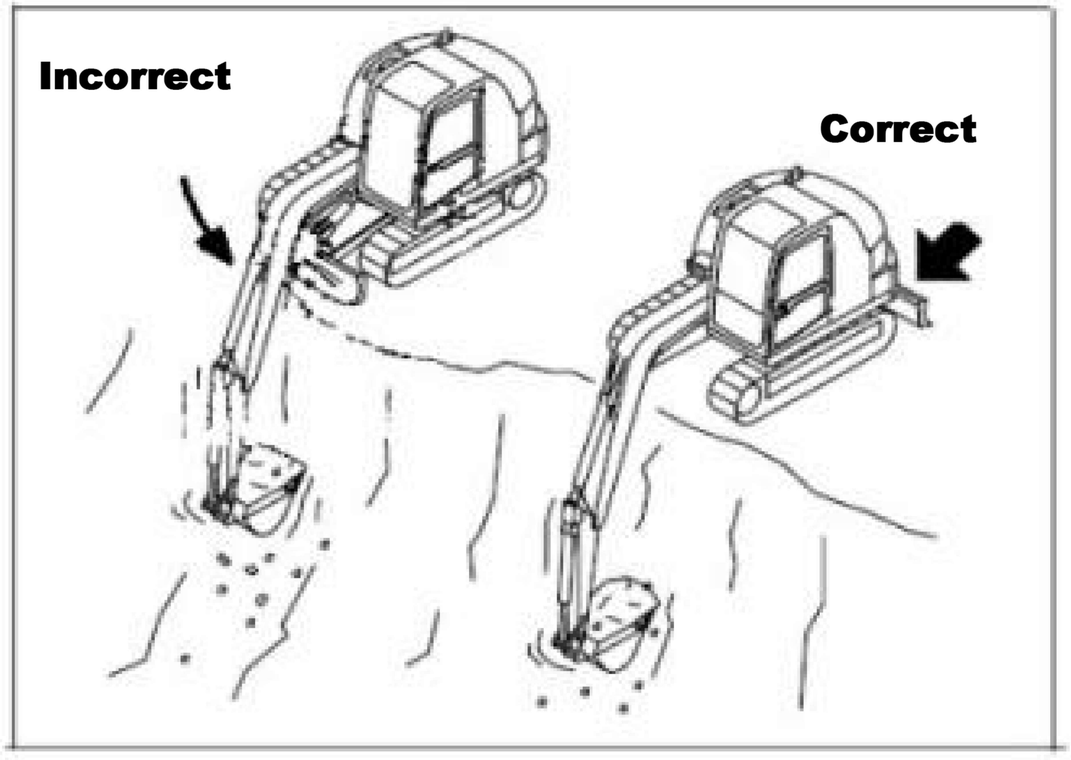
Note: When using the bulldozer blade as outriggers, do not use one end of the bulldozer blade to support the machine.



Bulldozer blade during backhoe operation

Note: When performing deep excavation with the bulldozer blade in the front position, ensure that the boom cylinder does

not touch the bulldozer blade. Except where the bulldozer blade must be in the front position, it must always be positioned at the rear.

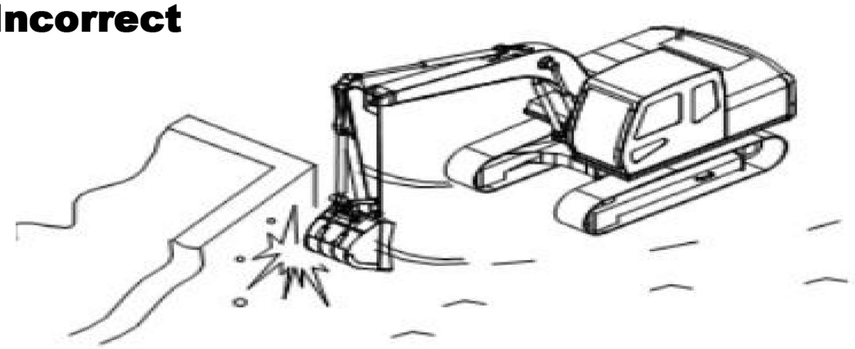


Do not use rotational force.

Do not use rotational force to compact soil, mounds, or walls. Do not insert the bucket teeth into the soil while rotating.

These actions will damage the working device.

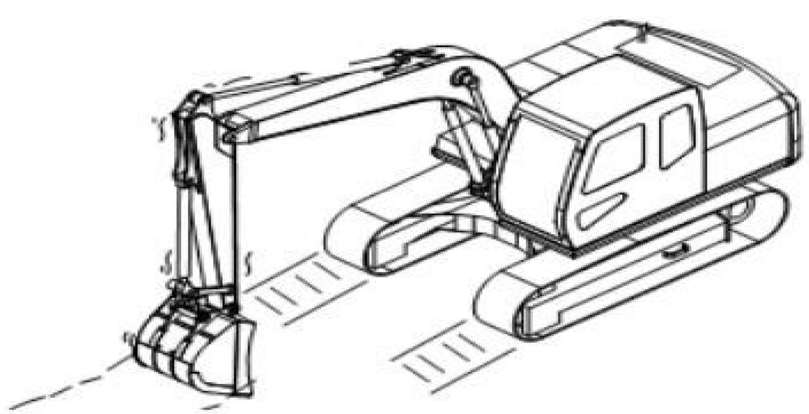
Incorrect



Do not use walking power for operation.

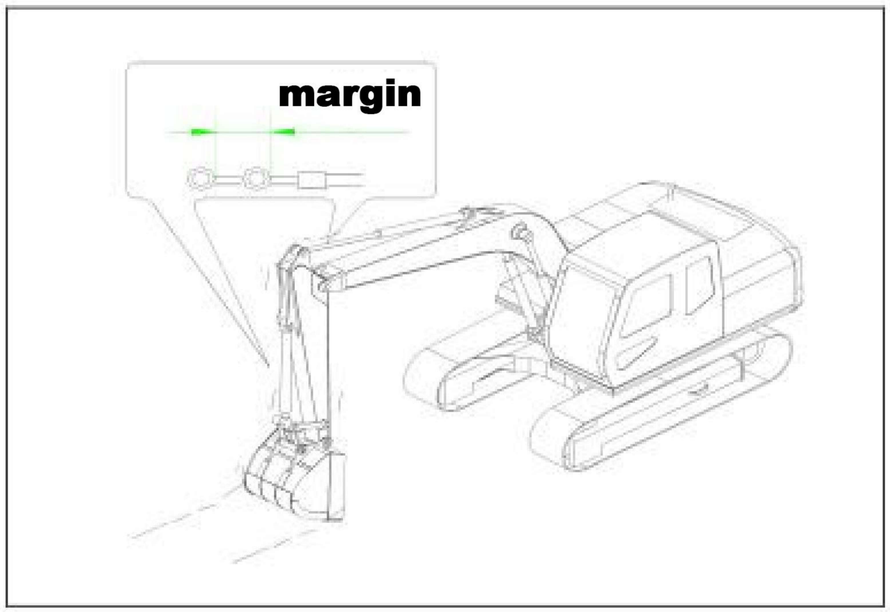
Do not dig the bucket into the soil using walking power. This will put excessive force on the rear of the machine.

Incorrect



Precautions when operating a hydraulic cylinder to its stroke end:

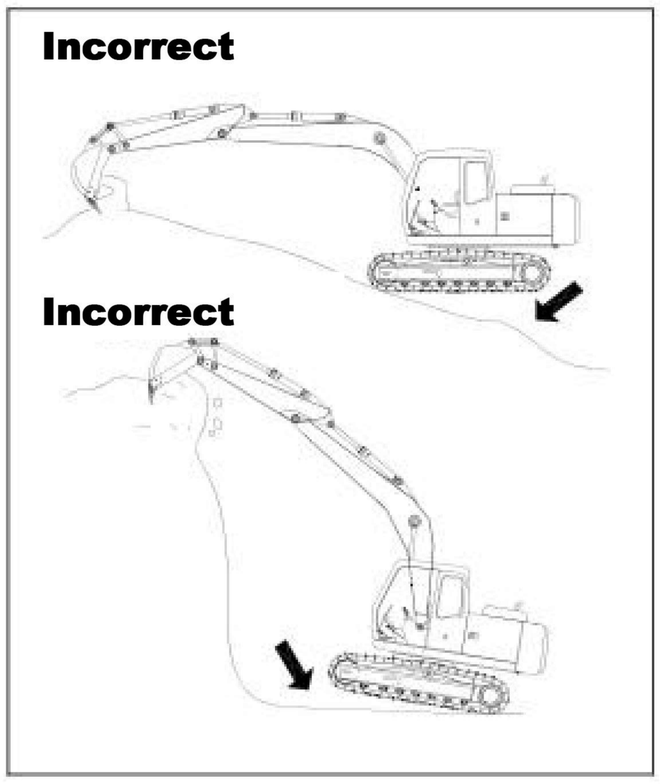
During operation, if the hydraulic cylinder is operated to its stroke end, force will act on the limit ring inside the cylinder, thus reducing the machine's service life. To prevent this from happening, a small safety distance should always be maintained when operating the cylinder.



Operation using bucket drop force is prohibited.

1. Do not use the bucket drop force as if it were a hydraulic breaker or pile driver;

2.Do not use the machine's drop force for digging. Both of these situations will cause excessive force to be applied to the rear of the machine, which will not only damage the machine but is also extremely dangerous.



(2) Transportation of machinery

Loading and unloading

 Warn!

When transporting the machine, legal regulations regarding the weight, height, and length of the load must be followed.

Choose a firm, level site with sufficient clearance from road curbs. Remove grease and other debris from the trailer that could cause the machine to slip. Operate at a low speed.

Loading the Machine

1. Ensure the trailer has reliable brakes;

2. Place anti-slip triangular blocks under the trailer tires;

3. Ensure the towing platform ramp is stable, strong, and of sufficient thickness for safety;

4. The horizontal angle of the towing platform ramp to the ground should be as small as possible, with a maximum of 15°, and the left and right heights should be consistent;

5. Proceed at low speed;

6. Disable automatic idle;

7. Determine the direction and slowly drive onto the towing platform;

-Do not allow the bucket cylinder rod to touch the trailer;

-When the machine is on the trailer platform, avoid operating any handles other than the travel lever.

8. Securely fasten the machine to the trailer.

Securing the Machine

1. Lift the safety lock handle;

2. Turn off the engine and remove the start key;

3. Turn off the battery switch;

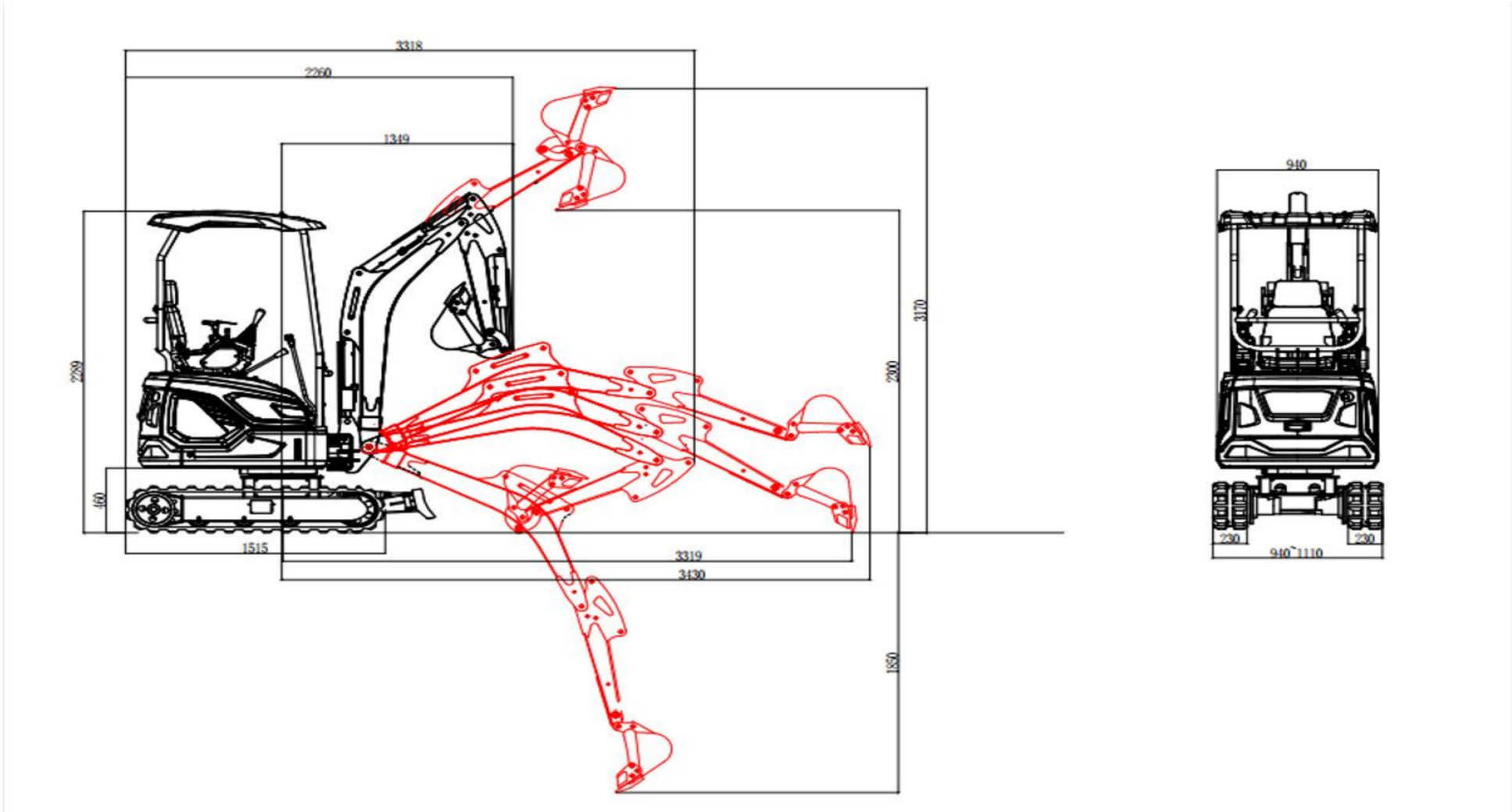
4. Lock the doors;

5. Secure the tracks with triangular blocks; use wire ropes to prevent the machine from moving.

Disassembly required for transportation

Note: During transportation, local, provincial, and national regulations regarding load weight, width, height, and length must be followed. When selecting a transportation route, restrictions imposed by various bridges, culverts, and roads, as well as travel time, must be considered.

Overall dimensions



During disassembly and lifting, take care to protect the hydraulic cylinder, secure movable parts, and cover any sharp edges where the slings contact the parts to prevent damage and potential hazards.

Disconnect the hydraulic lines.

 Warn!

Immediately after machine operation, the hydraulic oil temperature is very high and can burn unprotected skin.

Furthermore, residual pressure remains in the hydraulic system. Therefore, this residual pressure must be released before any maintenance work is performed on the hydraulic system to prevent personal injury.

1. Place the machine on a flat, firm surface;

2. Fully extend the bucket cylinder;

3. Fully retract the stick cylinder;

4. Retract the boom cylinder until the bucket is securely on the ground;

5. Turn off the engine;

6. Place the safety lock handle in the open position;

7. Turn the engine ignition key switch to the on position but do not start the engine;

8. Fully move the operating handle in each direction several times to release residual pressure in the hydraulic system;

9. Turn off the engine ignition key switch;

10. Release the pressure in the hydraulic oil tank through the hydraulic oil tank cap;

11. Disconnect the necessary lines.

Caution: Protect the environment when handling hydraulic oil!

12. Disassemble parts such as: boom, stick, bucket, counterweight

(3) Lifting machinery

 Warn!

Do not lift the machine if there are people in the cab or on the machine.

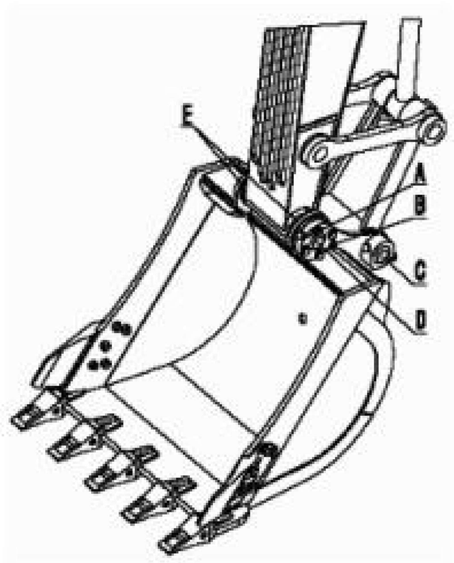
Use approved lifting equipment with sufficient load capacity.

(4) Replacing the bucket

Demolition bucket

Warn!

When using a hammer to disassemble the bucket pin, metal fragments may fly, so safety goggles, a safety helmet, and gloves must be worn while working, and the disassembled bucket must be kept stable.



1. Lower the working device to bring the bucket into contact with the ground;

2. Remove tightening bolts A and nuts B (2 sets);

3. Remove bucket connecting pins C and D;

Install bucket

 Warn!

Do not insert your fingers into the pin holes to check if the pins are aligned, as this may cause serious injury.

1. Align the boom with the bucket connection hole;

2. Apply a suitable amount of grease to the hole;

3. Install pins C and D respectively;

4. Install locking bolts A and nuts B (2 sets, tighten both nuts together).

(5) Before operation

General Provisions

 Warn!

Failure to comply with these regulations may result in serious injury or even death.

- Read and understand

• Read and understand the instruction manual before you begin operating the machinery.

• Read and understand the labels and instructions posted on the vehicle before operating or performing maintenance.

- Before starting, any malfunctions or defects that may affect safety must be eliminated.

- When starting the engine indoors, ensure the ventilation system is adequately equipped.

- Always remain seated when starting the engine.

- The driver's cab door must be closed during operation.

- Never operate the machinery for extended periods without ventilation.

- Use a seatbelt when performing any operations.

- Never operate the machinery while under the influence of alcohol, drugs, or other medications.

- To avoid hand or finger pinching, keep your hands away from areas with a risk of pinching (lids, doors, windows, etc.).

- When entering or exiting the machine, always face the machine and use steps and handrails. Always use a three-point grip, i.e., two hands and one foot or one hand and two feet. Never jump!

- Do not climb on surfaces not designed for climbing; only use surfaces with non-slip materials.

- Wear clothing suitable for safe operation.

- Wear a sturdy hat to enhance head protection.

- Do not overload the machine. Doing so will endanger safety.

Pre-start Procedures

Important! Ensure no one is near the machine before starting.

1. Place the machine in a service position.

2. Perform routine maintenance.

3. Adjust the seat for comfortable and safe operation of the controls and pedals.

4. Check the instruments and controls.

5. Check that the headlights, windshield wipers/washers, and reflectors are in working order.

6. Check for leaks.

7. Check for any defective or loose parts, as these can cause damage.

8. Check and confirm that there is fuel in the fuel tank.

9. Check and confirm that the hood is closed.

If the fuel is depleted or air enters the system for any reason, the air must be purged before starting the engine.

Before Starting

1. Remain seated in the operator's seat while starting the engine/machine. Refer to "Starting the Engine".

2. Fasten your seatbelt before performing any operations.

3. Wait until the "Waiting to Start" indicator appears before proceeding.

4. Check and confirm that all meters, controllers, and gauges are functioning correctly.

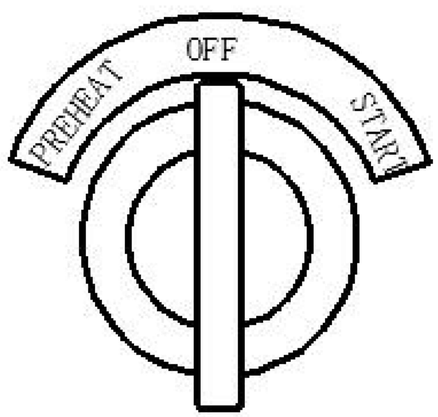
5. Before starting the machine, check and confirm that no one is nearby.

6. Sound the horn.

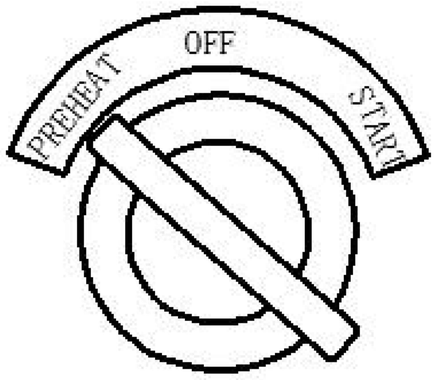
7. Finally, lift the safety lock handle to begin starting.

(6) Start switch

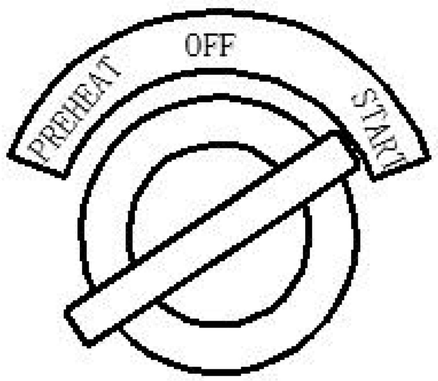
The start switch has 3 positions.



Stop position: OFF (engine stops immediately)



Preheat position: The PREHEAT engine must be preheated before starting (rotate to this position and hold for 1 minute).



Start position: START starter motor engaged, start engine.

(7) Start the engine

 Warn!

After checking for personnel and obstacles around the machine, start the engine.

Do not operate any control levers or switches while starting.

Important!

Do not hold the key in the (start) position for more than 20 seconds. This will severely damage the starting system. After 2 minutes, try starting the engine again. If any abnormal noises, excessive vibrations, or unusual behavior occur, immediately turn the key to the stop position and turn off the engine.

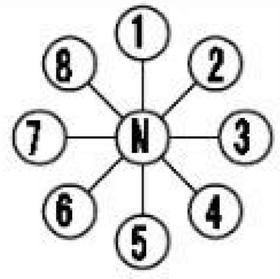
Note: When starting the engine at any temperature, the key switch must be turned to the preheat position for 1 minute to allow it to warm up.

In very cold conditions below -15°C, after starting the engine, do not immediately put it into high-intensity operation; allow the engine to idle for 10-15 minutes.

(8) Operating the machine

Operating the working device

Left operating handle

This handle controls 

Slewing (arm swing) and boom.

N Neutral Position

1. Stick Extended

2. Boom Extended and Right Swing

3. Right Swing (Press and hold the N position button, boom swings to the right)

4. Stick Retracted and Right Swing

5. Stick Retracted

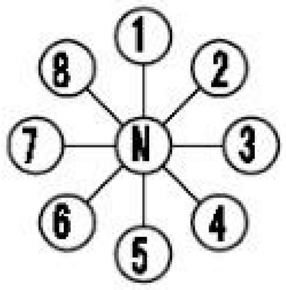
6. Stick Retracted and Left Swing

7. Left Swing (Press and hold the N position button, boom swings to the left)

8. Stick Extended and Left Swing

Right Control Handle

This handle controls the boom and bucket.



N Neutral Position

1 Boom Lowered

2 Boom Lowered and Bucket Extended

3 Bucket Extended

4 Boom Retracted and Bucket Extended

5 Boom Raised

6 Boom Raised and Bucket Retracted

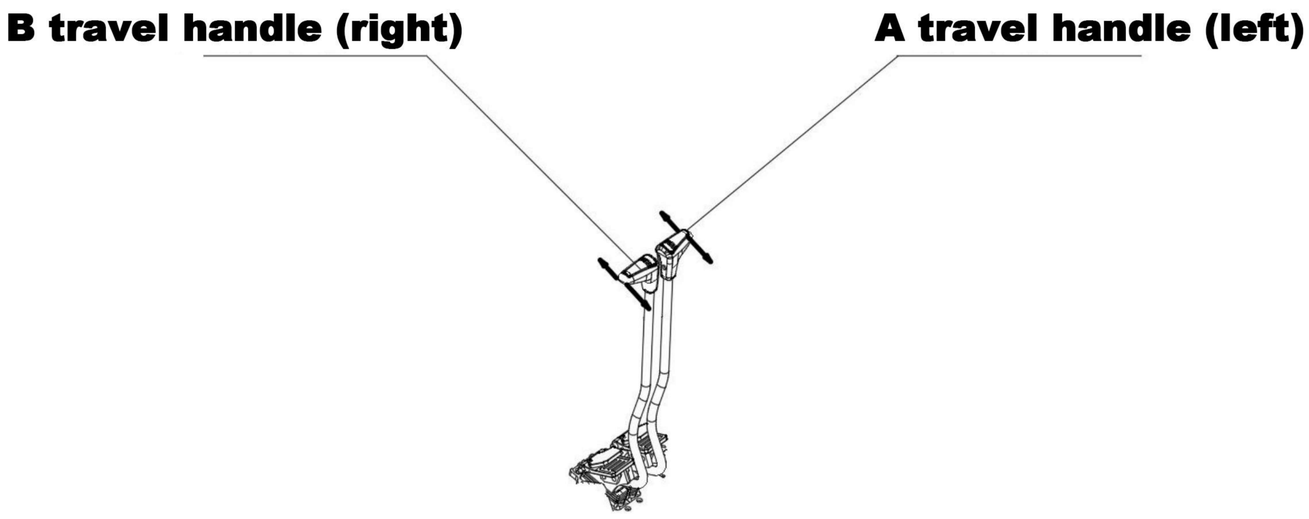
7 Bucket Retracted

8 Boom Lowered and Bucket Retracted

Travel Direction Control

 Warn!

Before operating the travel handle or foot pedals, check the direction of the tracks. If the sprocket is at the front of the machine, the travel handle (pedal) must be operated in the opposite direction. Do not change the travel direction abruptly, especially when stationary.



Forward Movement

1. Increase engine speed.

2. When the sprocket is at the rear of the machine, slowly push the travel handles A and B forward, or slowly depress the front of the pedal.

When the sprocket is at the front of the machine, slowly pull the travel handles A and B backward, or slowly depress the rear of the pedal.

Reverse Movement

1. Increase engine speed.

2. When the sprocket is at the rear of the machine, slowly pull the travel handles A and B backward, or slowly depress the rear of the pedal.

When the sprocket is at the front of the machine, slowly push the travel handles A and B forward, or slowly depress the front of the pedal.

Left Turn

When the sprocket is at the rear of the machine:

Pushing the right travel handle B forward will rotate the track in the forward direction, turning the machine forward to the left.

Pulling the left travel handle A backward will rotate the track backward, turning the machine backward to the left.

When the sprocket is at the front of the machine: Operate the handle in the opposite direction.

Right Turn

When the sprocket is at the rear of the machine:

Pushing the left travel handle A forward will rotate the track in the forward direction, turning the machine forward to the right.

Pulling the right travel handle B backward will rotate the track backward, turning the machine backward to the right.

When the sprocket is at the front of the machine: Operate the travel handle in the opposite direction.

Note: Different degrees of movement of the travel handle will also produce a turning effect. When the sprocket is at the rear of the machine, the machine will turn towards the side with a smaller turning radius; when the sprocket is at the front of the machine, the machine will turn towards the side with a larger turning radius.

Turning in place:

Push the left travel handle A forward while pulling the right travel handle B backward; the machine will turn clockwise in place.

Push the right travel handle B forward while pulling the left travel handle A backward; the machine will turn counter-clockwise in place.

(9) After the operation

 Warn!

When entering or exiting the machine, always face the machine and use steps and handrails to avoid slipping. When climbing or descending the machine, always use a three-point stance: two hands and one foot or one hand and two feet. Never jump.

Stopping the Machine

Important!

Park the machine on level ground.

Place the travel handles to the neutral position.

Pull the engine speed lever to the low idle position.

Lower the bucket to the ground, ensuring the bottom of the bucket is parallel to the ground.

Raise the safety lock handle and securely retract it into the hydraulic system.

Stop the Engine

Important!

Before stopping, let the engine idle for a few minutes to protect it.

Turn the start switch to the stop position.

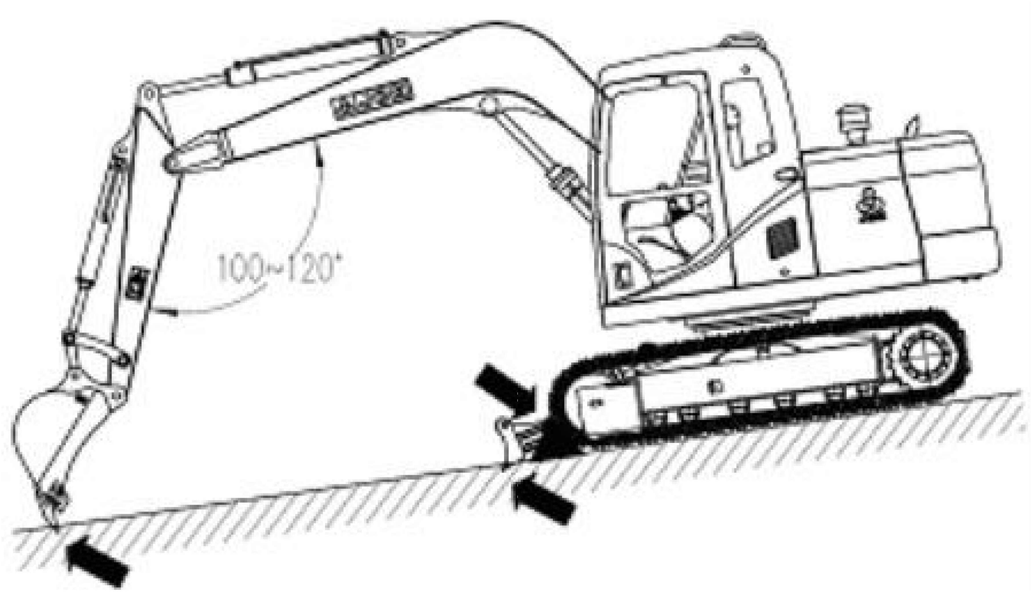
Note: If the machine will be stopped for an extended period (regardless of length), disconnect the battery switch (some models have a power solenoid switch installed; turning the key switch to the OFF position will automatically cut off power).

(10) Parking the machine

Overview

Important!

Choose level ground to park the machine. If it must be parked on a slope, insert a wooden stopper under each track and push the bucket teeth into the ground.



- Pay attention to weather conditions and take appropriate measures to prevent the machine from freezing to the ground,

sinking, or suffering any other adverse effects.

- Turn the switches and operating handles to the off/neutral position.
- Lift the safety lock handle to securely lock the system.
- Close the windows, lock the cab and all covers.
- Turn off the battery disconnect switch.

For long-term machine storage:

In addition to complying with the above storage regulations, the following points must also be observed:

- Check the machine for oil or water leaks, and for any malfunctions in auxiliary devices and tracks.
- Remove dirt, debris, and other contaminants from the tracks and rollers.
- Apply rust prevention treatment to exposed components and thoroughly lubricate the machine.
- Fill with fuel and hydraulic oil up to the maximum capacity mark.

(11) Working with a bucket

An excavator is a multi-functional machine that can be equipped with various attachments to perform a wide range of tasks.

The following describes only the simplest operation.

Digging Operation

Digging is performed in areas with gentle slopes where the machine is located. The hydraulic cylinders are most efficient when the angles between the bucket cylinder and the boom, and between the stick cylinder and the stick, are all 90°.

For digging operations, these angles should be utilized to improve efficiency. The stick digging range is approximately 30° forward to 45° backward. The difference in digging depth may be minimal. When using the cylinders, avoid pushing them to the end of their stroke to protect them.

Trenching Operation

Mount a suitable bucket and begin trenching. Adjust the tracks according to the direction of trenching for efficient operation. When digging wide trenches, dig the sides first, then the central area.

Loading Operation

When parking a dump truck, ensure good visibility for the operator to work effectively. In addition, loading can be done at the rear of the dump truck, rather than on the side, which makes the operator's job easier and improves efficiency.

Prohibited Operations

* Do not use swing force to rake soil on the ground, demolish buildings, or push the bucket teeth into the ground for rotation. Such operations may damage the machinery and attachments.

* Do not use walking force for operation. These operations may overload the machine and damage the track drive mechanism.

* Do not extend the hydraulic cylinder to the end of its stroke. This may overload the buffers and stops in the cylinder and shorten their lifespan. The hydraulic cylinder should be as far from the end of its stroke as possible during operation.

* Do not use the force of the bucket or boom falling to impact the machine. Use a hydraulic breaker instead of lowering the boom or using the bucket. This will overload the machine or damage the working device. This is extremely dangerous.

* Do not perform direct lifting operations. Essentially, this machine is prohibited from being used as a crane. However, if necessary, a proper push hook and certified lifting gear must be installed.

(12) Exit from the muddy ground

Extreme caution is required when working on soft, muddy ground.

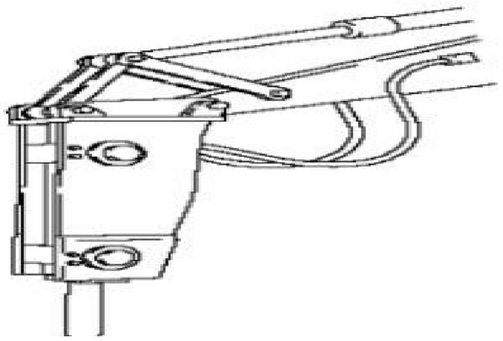
- If one track gets stuck, use the bucket to lift the stuck track and place a wooden block under it.
- If both tracks get stuck, place wooden planks under them. Push the bucket teeth into the ground, retract the stick as if digging, and push the travel handle forward to allow the machine to exit the mud.

Important! When using the boom or stick to lift the machine, use the bottom of the bucket (not the bucket teeth). Set the angle between the boom and stick between 90° and 100°. After working in water or exiting muddy ground, replenish grease to the pins of the working device. Check the lubricating oil in the guide rollers, track rollers, track chain rollers, and track drive boxes; replace the lubricating oil if it is contaminated.

(13) Optional components

Important! Select the appropriate auxiliary equipment based on the type of machinery to be equipped with. Different types of machines require different types of auxiliary equipment.

Hydraulic breaker



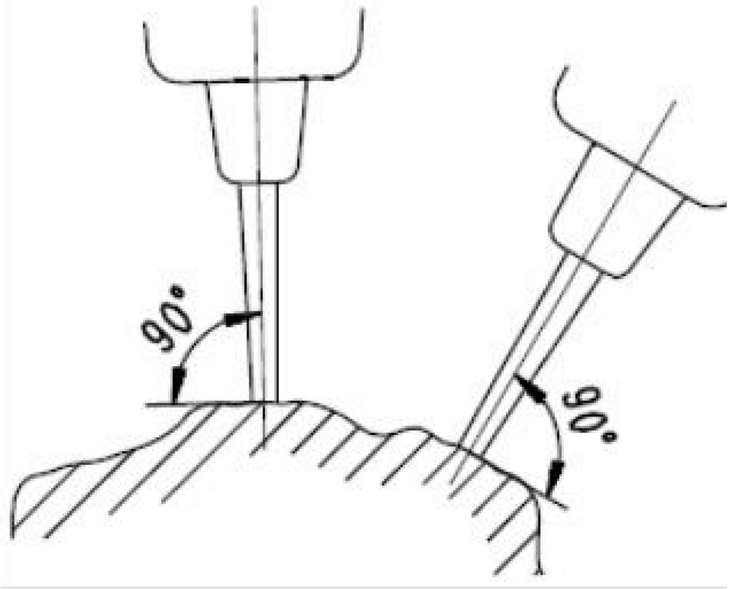
- Crushing rocks

- Demolition work

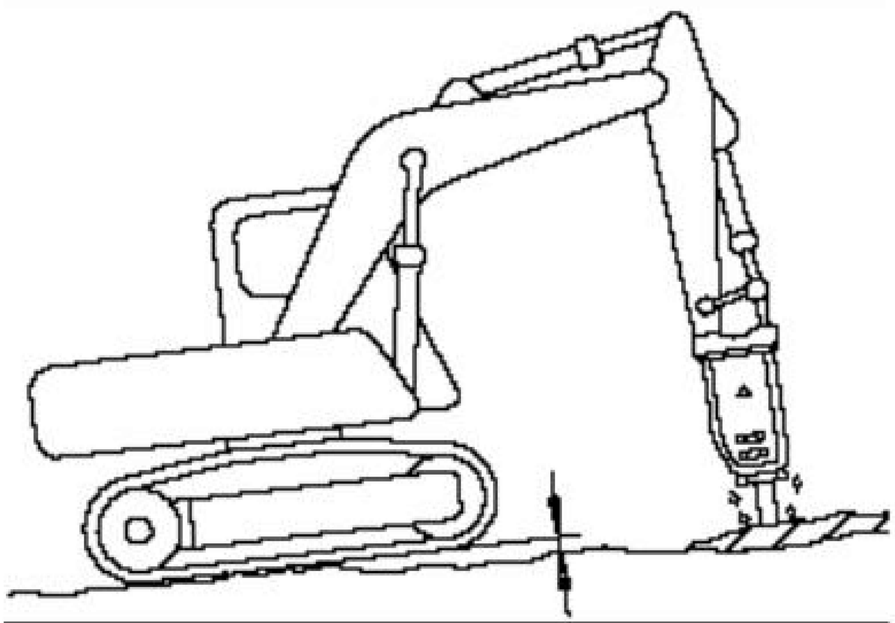
- Road repair

Hydraulic breakers are widely used for demolishing buildings, crushing road surfaces, excavating tunnels, crushing slag, and breaking or cutting rocks.

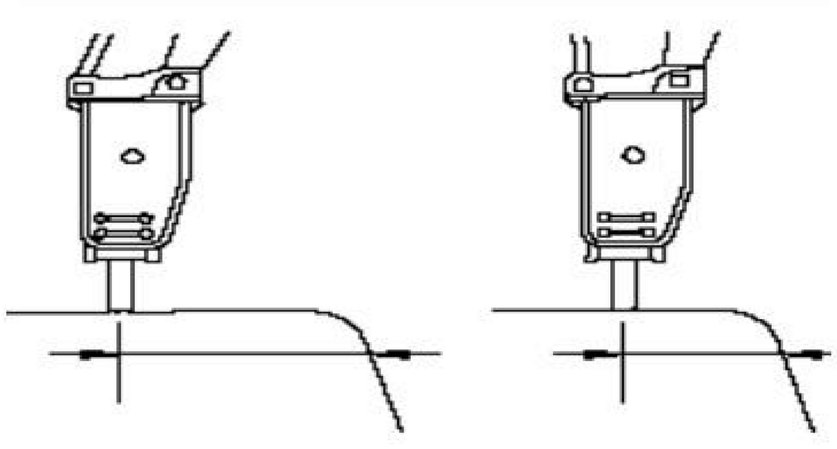
- Press the hammer head firmly against the surface at a right angle, as shown in the figure.



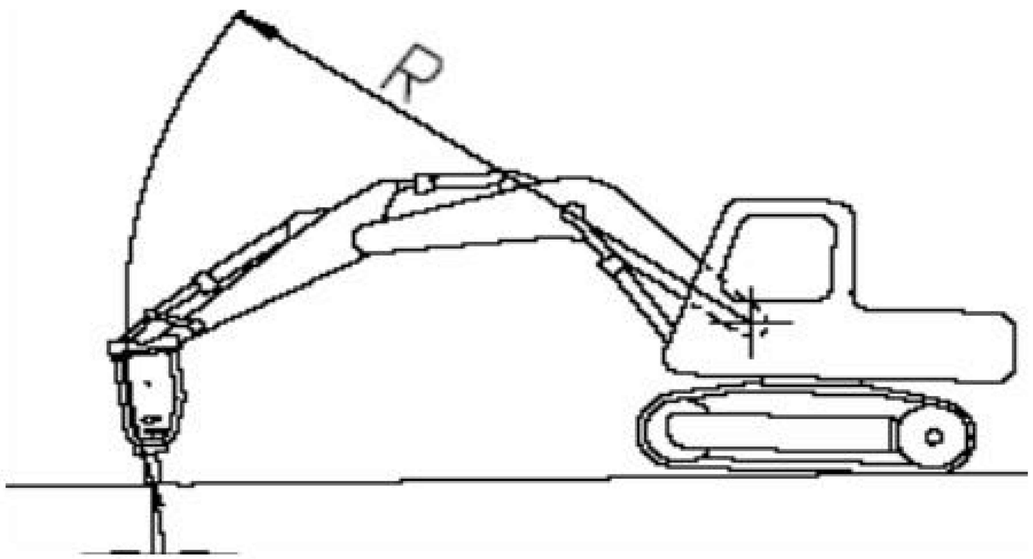
- When striking, press the hammer head firmly against the surface and lift the vehicle body 5 cm. Do not lift the vehicle body too high.



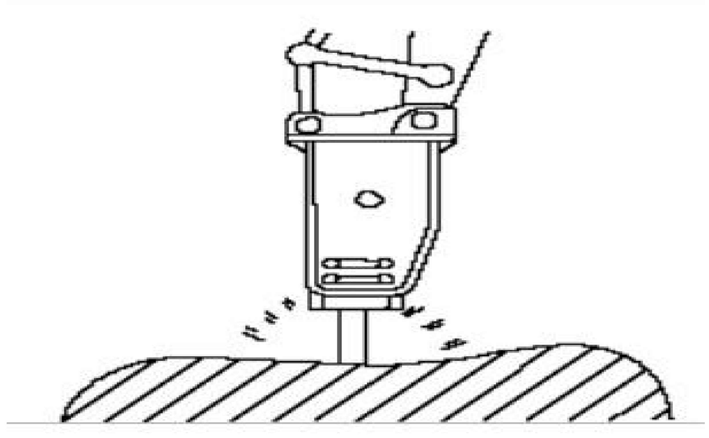
- If the surface has been repeatedly struck but has not broken within 1 minute, the crusher should be moved to break it from the end.



- The hammer's striking direction is slightly off from the direction of the crusher body. Therefore, the direction of the bucket cylinder must be constantly corrected to ensure it is always aligned.

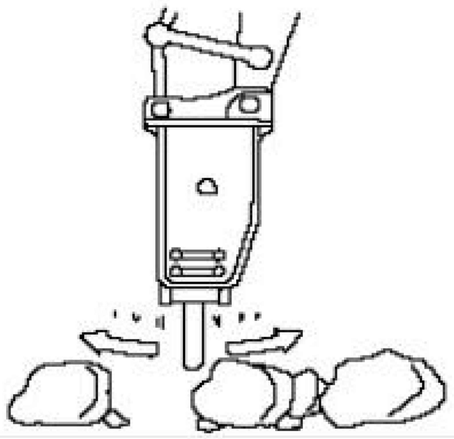


- Apply appropriate pressure to the hammer head to avoid dry-firing.

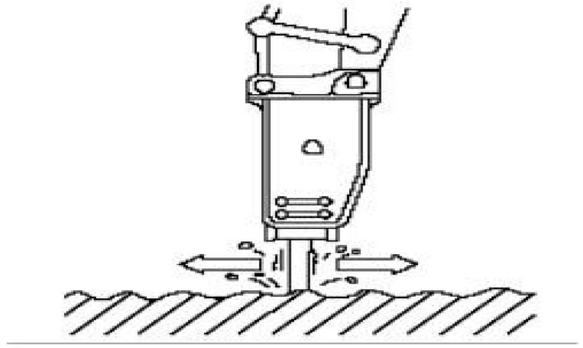


Precautions for operating a hydraulic breaker:

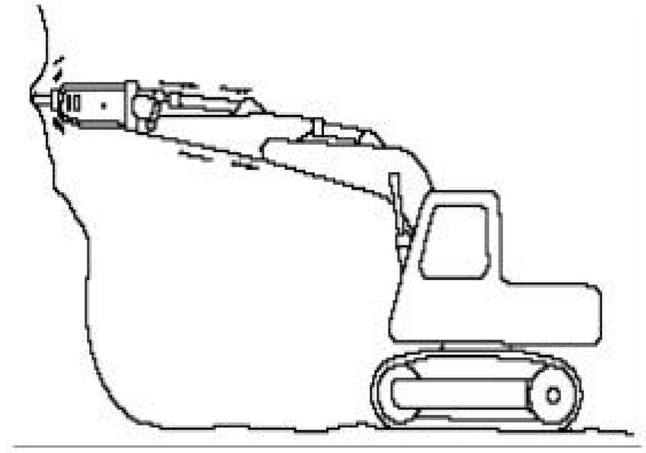
- When operating the cylinder, do not reach the end of its stroke; maintain a distance of 5 cm.
- Do not swing the hydraulic breaker towards rocks, concrete, or similar materials.

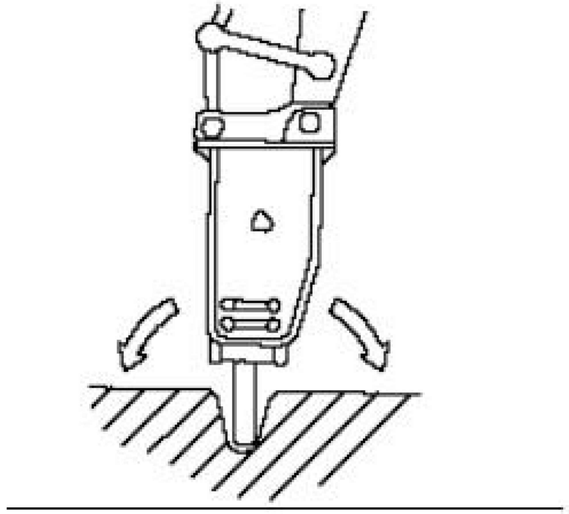


- Do not move the hammer during impact.



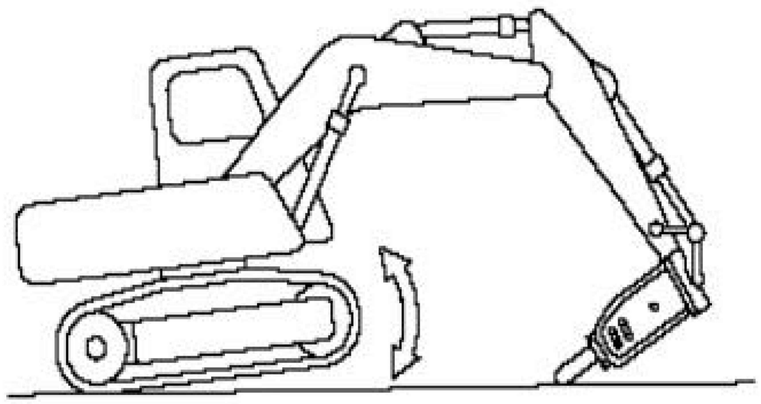
- Do not strike horizontally or upwards.





- Do not twist the hammer when drilling holes in the ground.

- When lifting machinery, do not allow the bucket cylinder to extend to its maximum position.

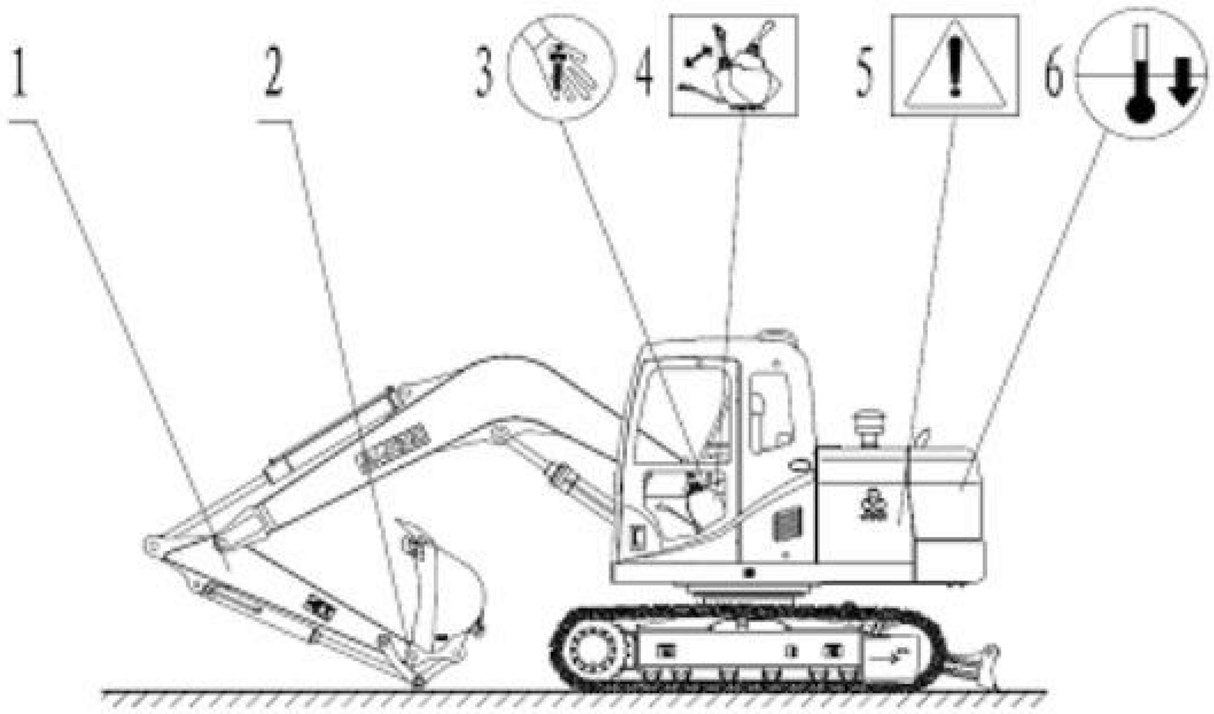


III. Location of Repair

 Warn!

If maintenance or repairs must be performed before the machine has cooled down, exercise extreme caution to avoid burns from hot liquids and parts.

Before performing any maintenance work, the machine should be parked on a level surface, and preparations should be made as shown in the diagram below:



1. Place the machinery on a flat, solid, level surface.

2. Lower any accessories to the ground.

3. Turn off the engine and remove the ignition key.

4. Lift the safety lock handle to lock the system.

5. Release the pressure in the pressurization lines and containers to prevent hazard.

6. Cool the machinery.

※ If maintenance or repairs must be performed before the machinery is cooled down, exercise extreme caution to avoid burns from hot fluids and parts.

Overview

 Warning!

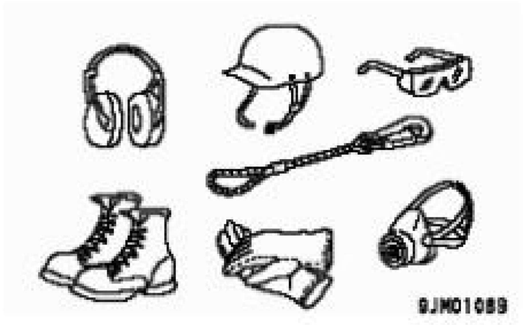
Failure to comply with these regulations may result in accidents and even serious injuries or fatalities.

- Before performing any maintenance on the machinery, please read all signs, diagrams, and this Operator's Manual. Each instruction contains important information regarding machinery maintenance.
- Do not work on the machinery unless you have the correct knowledge of its operation and have received specialized training.
- Using incorrect maintenance methods is extremely dangerous. Always ensure that you have sufficient knowledge, correct information, and appropriate tools and equipment to perform the machinery maintenance. Tools and equipment

required for machine repair.

- When pouring/draining oil or fuel, avoid spillage. If the liquid cannot be directly drained into a container, use a pump or attach a hose to safely drain the liquid. Spilled oil can pollute the environment and may cause a fire. Used oil and other liquids should always be disposed of by an authorized waste disposal company.
- Machinery used in contaminated areas (polluted environments and unsanitary areas) should be equipped with special methods. Furthermore, special safety regulations must be followed when maintaining such machinery.
- Check that all anti-slip protection is securely fastened. If not, tighten or replace it.
- Since various markings and stickers on the machine are adhesive, do not aim directly at their surfaces when using high-pressure washing. If they are damaged or missing, replace them.
- Ensure that steps, service areas, handles, and anti-slip surfaces are free of oil, diesel fuel, dirt, or ice.
- Do not step on mechanical parts that are not designed to be stepped on.
- Do not step on mechanical parts that are not designed to be stepped on.
- When working on machinery, never wear loose clothing, such as headscarves or jewelry, as they may get caught and

cause injury.



- Always wear a hard hat, protective glasses, gloves, protective shoes, and other necessary protective equipment.
- When servicing machinery, the engine must be turned off unless otherwise stated on the nameplate or in this manual.

Warn!

If work must be performed before the machine has cooled down, be extremely careful with hot liquids and parts, as they may cause burns.

- When changing engine oil or hydraulic fluid in the hydraulic system, remember that the oil may be very hot and can cause burns.
- When lifting or supporting components, the rated load of the lifting equipment used must be at least equal to the weight of the part being lifted.

- All lifting devices, such as slings, slings, ratchet locks, etc., must comply with national regulations regarding lifting equipment. The company will not be liable for any failure to use the lifting devices, tools, or working methods specified in this manual.
- When locating leaks, always use paper or wood chips, never use your hands.
- Before beginning maintenance or inspection work, release the pressure in the hydraulic system.

Before opening the engine hood, radiator housing, etc., turn off the engine and ensure that no tools or other items that could cause damage are left inside the machine.

- Before starting the engine, ensure that all covers on the machinery are closed, and then start the machine.
- All pressure vessels must be opened very carefully to release any residual pressure. Even after the engine has stopped, residual pressure may remain in the system. If these vessels are opened before releasing the system pressure, the fluid will be ejected under high pressure. Similarly, checks for leaks in connections and joints should only be performed after all pressure has been released from the system.

Hydraulic System: Must not be subjected to any external force.

- Scrapped accumulators should be punctured before disposal; otherwise, they may explode later.
- Do not adjust the pressure of safety valves above the manufacturer's recommended pressure.
- Install communication equipment such as radios and mobile phones according to the manufacturer's instructions to avoid interfering with the electronic systems and components that maintain mechanical function.
- Do not stand in front of or behind the machinery while the engine is running.
- After maintenance work is completed, close and tighten the engine hood and all protective panels.
- Measures related to welding.

(1) Preventive measures

 Warning!

Special equipment is required if the machine is used in an environment with a high risk of fire, such as an explosive environment.

Caution: Exercise extreme caution when cleaning the machine with a high-pressure water gun, as electrical components and wiring can be damaged even at relatively low water pressure and temperature. Protect electrical components and wiring appropriately. Simultaneously, turn off the engine and battery switches.

- Be aware of fire hazards. Learn how to use a fire extinguisher and know its location so you can find it immediately if needed.

- Even if the signs of fire are small, maintain a strong safety awareness and, if conditions permit, take the following measures:

• Keep the machine away from fire hazard areas.



- Lower auxiliary equipment to its parking position.
- Turn the start switch to the stop position.
- Exit the cab.
- Turn off the battery switch.
- Extinguish the fire. Notify the fire department if necessary. If the machine is equipped with a handheld fire extinguisher, it should be type ABC. ABC means it can extinguish fires caused by both solid and liquid organic materials, and the extinguishing agent must be non-conductive. Effectiveness rating: Class 1 indicates the extinguisher must act for at least 8 seconds, Class 2 at least 11 seconds, and Class 3 at least 15 seconds.

- Do not smoke near the machine while it is being filled with fuel or the fuel system is open. There should be no open flames around the machine.

- Diesel fuel is flammable and cannot be used for cleaning. Use approved solvents.

- Remember that some solvents can cause rashes and pose a fire hazard. Do not inhale the vapors of these organic solvents.

- Store flammable starting aids in a cool, well-ventilated place. Remember, never use this aid with an electric preheating device.

- Keep maintenance work areas clean. Cleanliness is crucial for the proper functioning of every system within the machine. Oil or water can make floors and steps slippery and is also dangerous to related electrical systems and power tools. Oily clothing or grease-soaked cloths are serious fire hazard.

- Inspect machines and equipment daily, ensuring all protective panels are free of dirt and oil. This reduces the risk of fire.

- When working in sensitive environments (such as sawmills, garbage dumps, or similar locations), maintain extra cleanliness of the machines. In such environments, equip machines with appropriate devices (such as silencers, radiator

covers, high-powered fans, or pre-filters) to reduce the accumulation of flammable materials.

- Any fire extinguishing equipment on the machine should be operational. Additional equipment can also be used for fire prevention; however, these devices cannot replace the operator's own fire prevention efforts.

- Inspect wiring to ensure it is not damaged by friction and will not be damaged by friction. This is especially important for unfuse wires,

For example:

· Between batteries

· Between battery and starter

· Between alternator and starter

· Wires connected to preheating elements

- When a wire without a fuse is disconnected, it is important to inspect it to ensure that its connection and clamping are not subject to wear. Wires without fuses must not be placed near any oil lines.

- When installing any additional equipment, ensure that all wire (circuit) connections have a fuse and a selected route and are securely clamped to prevent wear.

- Inspect fuel hoses and hydraulic system lines to ensure they are not damaged by friction.

- Welding and grinding work should only be performed in clean areas and must not be performed near components filled with compressed air or flammable liquids, such as fuel tanks, hydraulic lines, or similar items. Extra caution must be exercised when welding and grinding near flammable materials. Operators should always have fire extinguishers readily available.

- Materials such as batteries, plastic items, and other materials that may endanger the environment should not be simply discarded. Ensure that the disposal methods used do not pollute the environment.

Hazards related to polymers

Working on painted surfaces

 Warning! When heated, paint decomposes and forms numerous compounds. These substances may have an irritating odor, and frequent or prolonged exposure can be harmful to health.

Note: Always wear a respirator during all paint removal operations.

- When welding and cutting, the surface paint must be removed first, including an area within a radius of at least 10 cm (4 inches) around the work point. Heated paint releases harmful gases.

- Never weld on a painted surface. Besides being harmful to health, it can result in poor weld quality, reduced strength, and may even cause future weld cracking.

- Remove paint from the work area using sandblasting. If sandblasting fails to remove the paint, other methods must be used, such as a paint stripper.

Rubber and Plastics

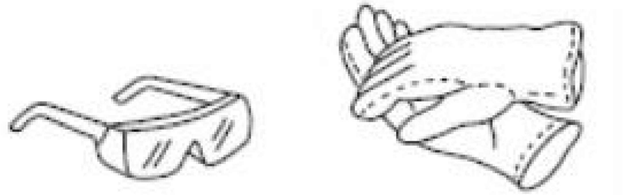
Caution: Polymers can form compounds harmful to health and the environment when heated.

- Do not weld or cut near polymers (rubber and plastic parts) unless thermally protected.

- Do not allow polymers to ignite when scraping them.

- Exercise caution when handling machinery that is burning or exposed to intense heat.

- Always wear gloves, safety goggles, and an approved respirator.



Fluororubber

Warning! Some seals are designed to withstand very high operating temperatures (e.g., in engines, main valves, hydraulic motors, and oil pumps). They are made of fluororubber, which, when heated to high temperatures, forms

hydrogen fluoride and hydrofluoric acid. This acid is highly corrosive and can cause severe burns if washed off the skin, resulting in injuries that take a long time to heal.

Checklist

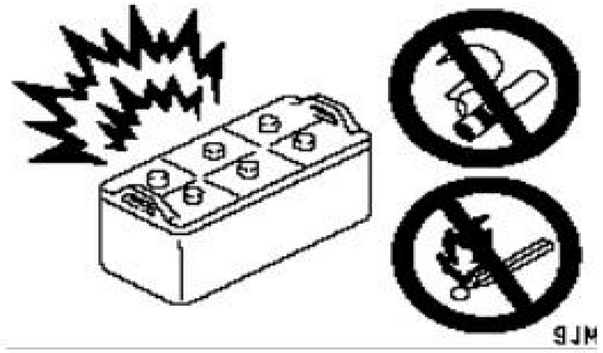
When handling machinery damaged by fire or exposure to intense heat, the following protective measures must be taken under all circumstances:

- As a precaution, handle seals (O-rings and other oil seals) in the same manner as handling fluororubber products.
- Never touch burned parts, as this may expose you to molten polymer. First, thoroughly wash with plenty of lime water (a calcium hydroxide solution or suspension, i.e., slaked lime in water); wear thick rubber gloves and eye protection.
- If skin contact with burned fluororubber is suspected, immediately apply hydrofluoric acid burn ointment and seek medical attention promptly, as symptoms may appear several hours later.
- Discard any protective gloves, cloths, etc., that may have come into contact with burned fluororubber.

(2) Storage Batteries

Regulations Concerning Storage Batteries

Important! Storage batteries contain substances that are harmful to health and pollute the environment. Therefore, discarded storage batteries must be properly disposed of in accordance with relevant local and national regulations.



- The battery may release explosive gases. Do not smoke around the battery.

- The electrolyte is corrosive. Prevent electrolyte from splashing onto unprotected skin. If splashed, rinse with water for 10-15 minutes.

- To remove the battery, first disconnect the grounding wire. To reduce the risk of sparks (which can cause a fire), always connect the grounding wire last when installing the battery.

- Do not tilt the battery excessively in any direction, otherwise the battery electrolyte may leak.

- When charging the battery, follow the instructions on the next page.

- When using a backup battery to help start the engine, follow the instructions on the next page.

- Do not connect an uncharged battery to a fully charged battery. An electrical surge can cause the battery to explode.

- Ensure that metal objects (such as tools, rings, watch straps) do not come into contact with the battery terminals, as this could cause injury or fire. The terminals and battery terminal caps should be reinstalled frequently.

- When using a battery from another machine as a starting power source, do not allow the two machines to come into contact, as this can damage the electrical systems of both machines.

- First start the engine on the machine with the auxiliary battery and let it idle for a few minutes before starting the engine on the machine with the battery to be charged.

- Batteries contain substances that are harmful to health and pollute the environment. Therefore, discarded batteries must be properly disposed of in accordance with relevant local/national regulations.

 Warning! Connecting an uncharged battery to a charged battery can cause a current surge that may result in a battery explosion, leading to injury or death. When using an auxiliary battery for starting, check that the auxiliary battery or other power source has the same voltage as the standard battery.

Follow these steps:

1. Turn off the battery switch.

2. Remove the battery terminal caps.

3. Prepare a 12-volt battery for connection.

4. Connect the positive terminal of the mechanical battery to the positive terminal of the auxiliary battery using a jumper wire.

5. Connect another jumper wire between the negative terminal of the battery and the mechanical ground point.

6. Turn on the battery disconnect switch and connect the mechanical battery.

7. Start the engine using the ignition key in the cab.

8. After starting the engine, first disconnect the jumper wires on the machine, and then disconnect the other end of the jumper wires on the auxiliary battery pack (-) terminal.

9. Reinstall the battery terminal caps.

Battery Charging

 Warning! When fast charging a battery (except for maintenance-free batteries), remove the battery cover until charging is complete. During charging, an explosive mixture of hydrogen and oxygen is formed. Short circuits, open flames, or sparks near the battery can cause a violent explosion.

- Disconnect the charging current before disconnecting the charging clips.

- Ensure good ventilation, especially when charging in a confined space.

- The battery electrolyte contains corrosive sulfuric acid. Any electrolyte spillage on skin should be removed immediately. Wash with soap and plenty of water. If electrolyte splashes into eyes or other sensitive areas of the body, immediately flush with plenty of water and seek medical attention as soon as possible.

(3) Air conditioning

Refrigerant

Overview

R134a refrigerant is used in air conditioning systems. Air conditioning systems using R134a have an indicator panel next to the receiver-drier. R134a does not have the potential to deplete the atmospheric ozone layer; however, it contributes to the greenhouse effect, so it must not be intentionally released into the outdoor air. The health hazard of R134a refrigerant is moderate.

Maintenance Equipment

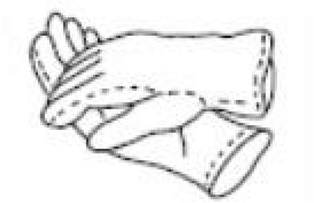
Physical vessels, filling stations, vacuum pumps, and hoses are available for maintenance, but only one type of refrigerant can be used. This type of refrigerant must not come into contact with another refrigerant. For example, even a small amount of R12 can have a significant decomposition effect on R134a. This, in turn, can damage parts in the refrigeration unit.

Personal Protective Equipment

If there is a risk of exposure:

- Wear close-fitting goggles and protective gloves to protect exposed skin (risk of frostbite).





- Do not wear contact lenses.

Health Risks

Refrigeration in liquid form can cause frostbite. Its gaseous form, at low concentrations, can have some effects on the human body, particularly on the nervous system.

Large quantities of gas may have an anesthetic effect. Due to the risk of explosion, components or containers containing refrigerant must not be exposed to temperatures above +40°C (+104°F).

First Aid Measures in Case of an Accident

- If accidentally exposed to spilled refrigerant, take the following measures:

• Refrigerant in gaseous form. When heated, low concentrations can be harmful to the body, particularly affecting the nervous system. High concentrations have anesthetic properties. In either case, remove the person from the danger zone to fresh outdoor air. If the situation is serious, seek immediate medical attention.

• If a large amount of liquid refrigerant has come into contact with the eyes, rinse the eyes with lukewarm tap water. If other symptoms persist, consult a doctor.

- Extreme caution must be exercised when using refrigerant.

- Air conditioning systems contain pressurized refrigerant. Do not intentionally release refrigerant into the environment. If the air conditioning system must be turned on, the refrigerant must first be collected in a special pressurized container for reuse or disposal.

- Air conditioning systems are pressurized devices, and refrigerant leaks are possible. Never disconnect the connecting pipes or remove the charging plug on the compressor. If a leak is suspected, do not attempt to add refrigerant yourself. Contact an authorized service center for appropriate assistance.

- Specialized equipment must be used when emptying (disassembling) or recharging (refilling) refrigerant.

- Refrigerant vapor is heavier than air and will settle on the ground.

- Smoking, welding, or using other open flames is prohibited in areas where refrigerant is used. Otherwise, the refrigerant gas may ignite, creating a toxic fumes. Inhaling these fumes is extremely dangerous. The gas formed after heating has a pungent odor at high concentrations.

(4) Engine

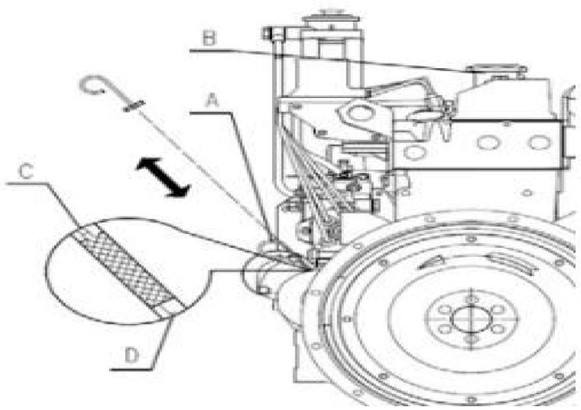
Checking the Lubricating Oil Level

1. Open the engine hood.

2. Pull out the dipstick (A) and wipe it dry with a clean cloth.

3. Reinsert it and then pull it out.

4. If the lubricating oil level is between C and D, it is normal. If the lubricating oil level is below mark D, add lubricating oil to the appropriate level through the filler cap (B).



A. Oil dipstick

B. Filler cap

C. High oil level mark

D. Low oil level mark

Change engine oil

 Warning! Hot lubricating oil can burn unprotected skin.

Item	Maintenance Interval												
	50 Hours	75 Hours	100 Hours	150 Hours	200 Hours	400 Hours	500 Hours per year	1 or 2 months	1 Year	800 Hours	1500 Hours	3000 Hours	2 Years
* Inspect fuel hoses and clamps	☆												
Change engine oil	(1) Oil pan depth (101 mm, 3.98 in.)	★	☆										
	(2) Oil pan depth (121 mm, 4.76 in.)	★		☆									
	(3) Extended oil pan depth (101 mm, 3.98 in.)	★		☆									
Inspect fan belt tension and damage			☆										
* Clean air filter element (Replace the element after cleaning 6 times)			☆										
Clean fuel filter (element type)			☆										
Inspect battery electrolyte level			☆										
Replace oil filter element	(1) Oil pan depth (101 mm, 3.98 in.)	★			☆								
	(2) Oil pan depth (121 mm, 4.76 in.)	★				☆							
	(3) Extended oil pan depth (101 mm, 3.98 in.)	★				☆							
Inspect radiator hoses and clamps					☆								
* Inspect intake lines					☆								
* Replace fuel filter						☆							
Clean inside of water hose and radiator							☆						
Replace fan belt							☆						

(1) This oil pan depth is an optional value for Z482-E3B and D722-E3B.(2) This oil pan depth is the standard value for Z482-E3B, D722-E3B and D782-E3B.(3) This oil pan depth is the standard value for Z602-E3B and D902-E3B.★ Please change the engine oil and oil filter element after the initial 50 hours of operation.* According to the U.S. EPA non-road engine emission standards, the above items (marked with *) are listed by Kubota as important components related to emissions. As the owner of the engine, you are responsible for performing the necessary maintenance on the engine as described above.

Oil Change

1. Place the machine in the maintenance position.

2. Place a container (20 liters or more) under the drain valve at the bottom of the engine oil pan.

3. Open the drain valve.

4. Drain the lubricating oil.

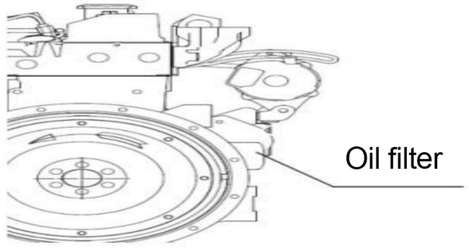
5. Close the drain valve.

6. Add lubricating oil through the oil filler cap (B).

When disposing of waste oil and fluids, please protect the environment!

Replacing the Engine Oil Filter

The engine oil filter should be replaced every time you change the oil. The oil filter is a single-use item and cannot be cleaned and reused; it must be replaced entirely.



Disassembly

Use appropriate tools

After installation

1. Start the engine and check the gasket's seal. If the seal is poor, remove the filter and inspect the sealing surface.

Caution! Generally, overtightening the filter does not improve the seal.

Important!

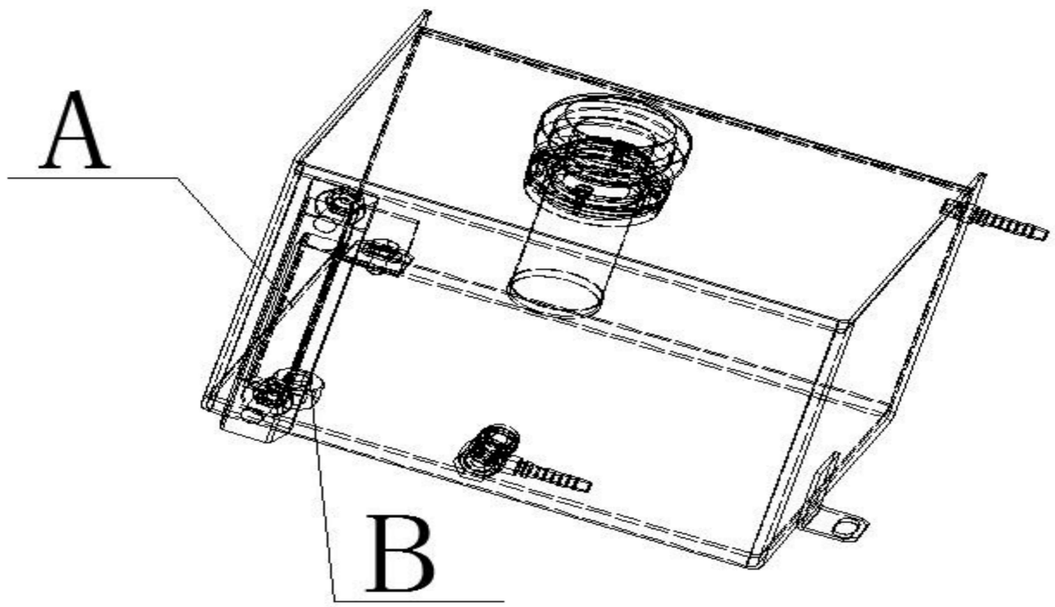
After replacing the oil filter, the engine must be run at low idle for at least 1 minute. It is important to lubricate the filter before installation. This ensures immediate lubrication after startup.

Warning! Waste oil and waste liquid should be disposed of in an environmentally friendly manner.

(5) Fuel System

Fuel Tank

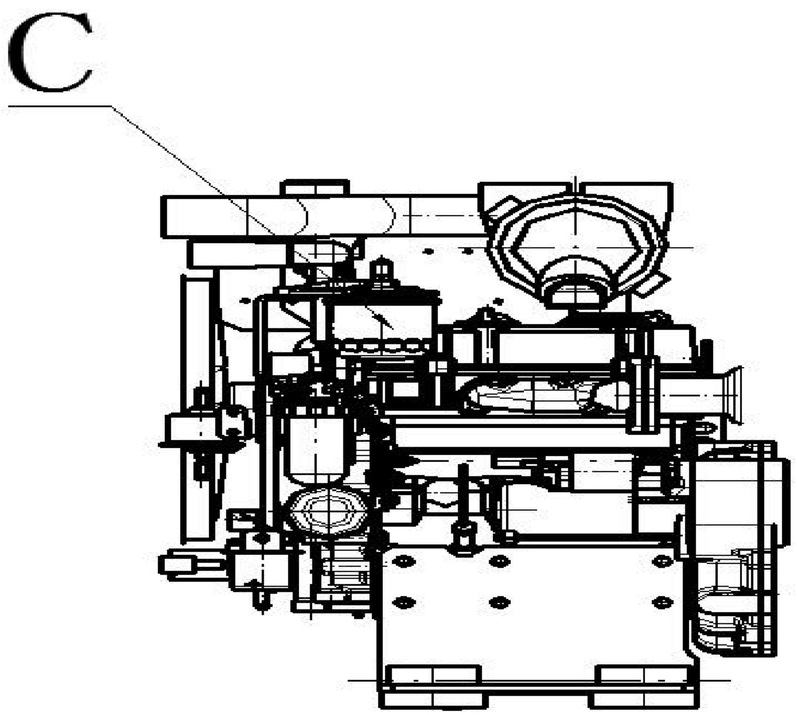
A clean fuel tank is essential for the trouble-free operation of a diesel engine. The fuel tank holds 15 liters of fuel. Wipe the area around the tank cap clean before opening it. Avoid overflowing during filling, as spilled fuel will attract dust. In cold weather, keep the fuel tank full to prevent condensation.



Note: Avoid damaging the fuel tank level gauge (A) with solvents or other contaminants. Drain sediment every 100 hours.

Open the bleed valve (B) at the bottom of the fuel tank and drain the sediment.

Replace the fuel filter.



Replace the fuel filter every 1000 hours. The filter is a disposable item; it does not need to be cleaned and must be replaced entirely.

Removal

1. Use appropriate tools to remove the fuel filter (C).

Installation

1. Coat the gasket with diesel fuel.

2. Hand-tighten the filter until the gasket is in full contact with the sealing surface.

3. Then tighten the filter by 1/2 turn.

4. Bleed the air.

Fuel-Water Separator Drain

The fuel-water separator is located on the side wall of the diesel tank. Place a container at the hose below the fuel-water separator and open the drain button to drain the water.

Fuel System Air Bleeding

 Warning! If the fuel in the tank runs dry or air enters the system for any reason, the air must be purged from the system.

Under no circumstances should the fuel system be left unsealed before starting the engine. Otherwise, the fuel injection pump may be severely damaged.

Overview

1. Wipe around the bleed valve plug on the cylinder head.

Fuel Filter

2. Unscrew the bleed valve plug and pump fuel using a hand pump until no air bubbles are present in the flowing fuel.

3. Tighten the bleed valve plug while fuel is flowing.

Cylinder Block

4. Open the bleed valve plug on the cylinder block.

5. Operate the hand pump until only fuel flows out without producing air bubbles.

6. Tighten the bleed valve plug while fuel is flowing.

After Bleeding Air

7. Let the engine idle at a high speed for approximately 10 minutes.

8. Check for leaks after starting the engine.

(6) Air filter

Overview

Air filters prevent dust and other impurities from entering the engine. Air first enters the main filter and then the auxiliary filter. Engine wear largely depends on the cleanliness of the intake air. Therefore, it is crucial to regularly check and properly maintain the air filter. Maintain a high level of cleanliness when using the air filter.

Important!

Under no circumstances should you run an engine without a filter or with a damaged filter.

Regularly check the hoses and conduits from the air filter to the engine intake manifold to ensure there are no leaks. Keep a spare air filter on hand and store it in a well-protected, dust-free place.

Air Filter

Cleaning the Air Filter

The air filter should be cleaned when the dashboard displays a dirty air filter warning.

Note: In dusty and humid conditions, it should be cleaned daily.

Follow these steps:

1. Loosen the mounting nuts, open the cover, and carefully pull out the main filter element;

2. Empty and clean the main filter, filter cover, and tank walls;

3. Reinstall.

Main Filter

The filter can be cleaned a maximum of 6 times, after which it must be replaced. If the filter is damaged, it should also be replaced promptly.

Note: Do not clean the auxiliary filter.

Since the filter replacement interval depends entirely on the machine's operating environment, it may sometimes be necessary to replace the filter more frequently.

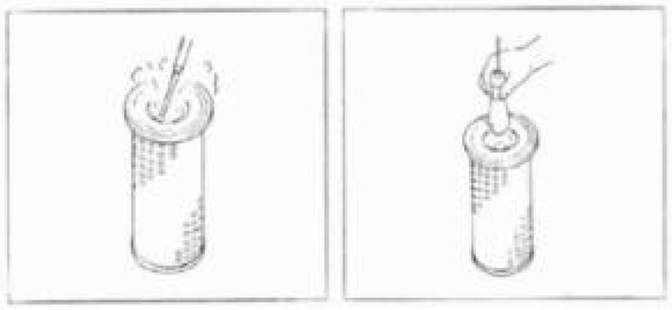
Cleaning the Main Filter

Machine Cleaning

1. Carefully tap the end of the main filter on a soft, clean surface.

Note: Do not lean it against a hard object while tapping.

Cleaning with compressed air and inspection with light.



1. Use clean, dry air with a maximum pressure of 500 kPa. The distance between the nozzle and the filter must not be less than 3-5 cm (1-2 inches).

2. Blow the filter clean from the inside, along the pleats.

3. Inspect the filter. Inspect the filter using a light. Even small holes, scratches, cracks, or other damage require replacement.

Replace the main filter. Press the main filter with both thumbs simultaneously and pull it out. Prevent the auxiliary filter from being pulled out along with the main filter.

Replace the auxiliary filter.

If the main filter is damaged, the auxiliary filter will function as a protective filter. If the main filter has been replaced or cleaned, but the indicator light is still on, it indicates that the auxiliary filter is clogged.

Note: The auxiliary filter can only be replaced, not cleaned. Replace the auxiliary filter at the same time as replacing the main filter.

(7) Cooling system

Overview

If the engine temperature is too high, the radiator should be cleaned even if the coolant level is normal.

Important! Be careful not to damage the fins on the radiator core. If the engine temperature remains too high, contact an authorized service center for remedial action.

 Warning! Compressed air, steam, or water may cause injury; protective goggles must be worn.

All fins must be cleaned every 500 hours.

1. Use compressed air to remove all dirt, dust, and leaves adhering to the radiator fins. After removing the radiator cover, clean the radiator with compressed air.

2. Clean the mesh in front of the oil cooler, the condenser fins of the booster air cooler, and the air conditioner.

3. Inspect the rubber hoses for damage and cracks. If damaged, the hoses must be replaced. Check the hose clamps for looseness.

Coolant

Coolant with antifreeze and anti-rust properties

Antifreeze

Check antifreeze properties every 500 hours.

Shipped from the factory, the cooling system is already filled with a mixture of the main components of coolant, water, and concentrated antifreeze, which lowers the freezing point and raises its boiling point.

Rust Prevention

Concentrated antifreeze contains effective rust inhibitors to protect the engine and radiator. These additives have limited durability. Therefore, the coolant should be changed every 2000 hours, 1 year, or 3000 hours.

Caution: Never mix concentrated antifreeze with any antifreeze or additives from other manufacturers.

Check Coolant Level

 Warning! The coolant temperature is still very high immediately after the engine is turned off. Do not open the radiator cap until the coolant has cooled down.

Replacing the Coolant

Change the coolant every 2000 hours.

Draining the Coolant

1. There is a ball valve under the radiator; place a container under the valve.

2. Loosen the radiator cap.

3. Open the valve.

 Warning!

When disposing of waste fluid, take care to protect the environment. Adding Coolant

When changing coolant, the cooling system capacity is approximately 5.2 liters.

1. After flushing, close the drain valve and open the radiator cap.

2. Add the recommended coolant through the filler neck.

3. Let the engine idle at low speed for 5 minutes.

4. Stop the engine, refill with coolant until full, and replace the radiator cap.

Important! Never add cold coolant to an engine that is running or has just finished running and is still very hot. This may cause cracks in the cylinder block and cylinder head. Failure to change coolant promptly may cause blockage of the cooling

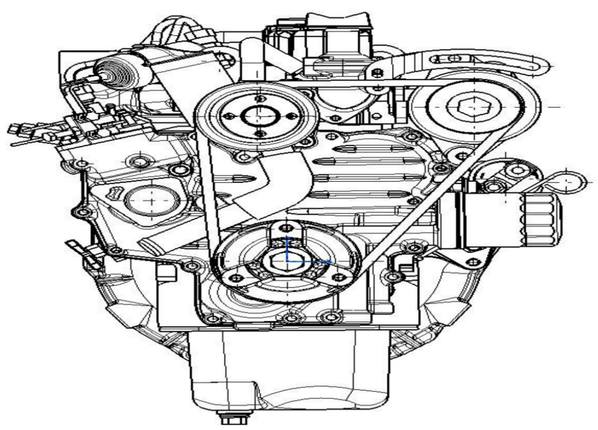
system and pose a danger of engine seizure.

Water Pump Fan Belt Tension

Warning! The engine must be stopped when checking belt tension to avoid damage.

Check the belt every 250 hours.

With proper belt tension, the belt should be able to depress approximately 15 mm. If it depresses more than 15 mm, the belt should be replaced.



(8) Electrical system

Battery Switch

The battery switch is an electromagnetic power switch located on the back of the fuse box mounting plate.

Important!

After work, the ignition key switch must be turned to the "OFF" position. Otherwise, the battery will be depleted, affecting its lifespan.

Battery Electrolyte Level

The battery equipped with this machine is a maintenance-free battery.

 Warn!

The gas in the battery (hydrogen) is flammable.

Do not expose it to sources of ignition such as open flames, cigarettes, or sparks. If battery electrolyte spills onto clothing

or skin, rinse immediately with water. If battery electrolyte gets into eyes, flush immediately with plenty of water and seek medical attention as soon as possible.

Check Electrolyte Level (except for maintenance-free batteries)

1. Open the battery compartment cover on the right side of the machine.

2. Loosen the cap. The electrolyte level should be approximately 10 mm above the battery plates. If the level is too low:

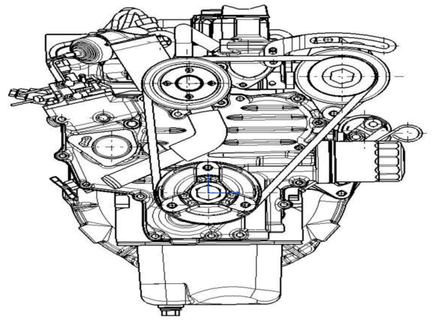
1. Add distilled water.

2. After adding water, operate the machine to mix the water with the battery electrolyte. This is especially important in cold weather.

3. Check that the cable terminals and posts are clean, securely fastened, and coated with petroleum jelly or a similar substance.

Alternator

Check Belt Tension



Warn!

The engine must be stopped when checking belt tension to avoid injury.

With proper belt tension, the belt should be able to depress down approximately 15 mm. If it depresses more than 15 mm, the belt needs to be replaced.

Note: Incorrect wiring can affect the alternator's operation and damage the machine, therefore the following instructions should always be followed:

- The battery and alternator cables must not be disconnected while the engine is running. Otherwise, malfunctions may occur in the alternator and electronic components.
- Disconnect and insulate the battery cables before performing any work on the alternator equipment.

Battery Connections

- Battery terminals must never be confused. Each terminal is clearly marked with either (+) or (-). Incorrect cable connection will result in cable corruption and will immediately damage the alternator rectifier.

- When disconnecting the battery, first use the battery switch to cut off the circuit.

Welding

- Before welding on machinery or any device mounted on machinery, the battery switch must be turned off.

- Before performing any welding on machinery, the battery cable must be disconnected and the cable plug removed from the electronic control unit.

- There should be no current in the wires when disassembling and reconnecting (with the battery switch off).

- The grounding wire of the welding equipment should be as close as possible to the welding point.

- Before welding, remove all paint from at least a 10 cm (4 inch) radius around the welding point. Heated paint releases harmful gases.

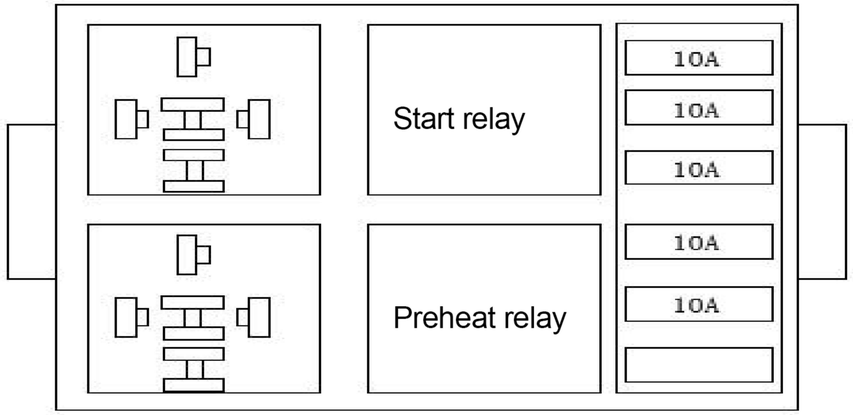
- All paint decomposes and forms numerous compounds when heated; prolonged exposure to these compounds can

cause pain. Allergic reactions. Health hazards.

- In addition to health hazards, the quality and strength of the weld will be compromised, and may even lead to future breakage of the weld. Therefore, never weld directly on painted surfaces.

Fuse Box

The machine is equipped with a fuse box, located on the left side under the seat. The fuse box contains fuses and relays.

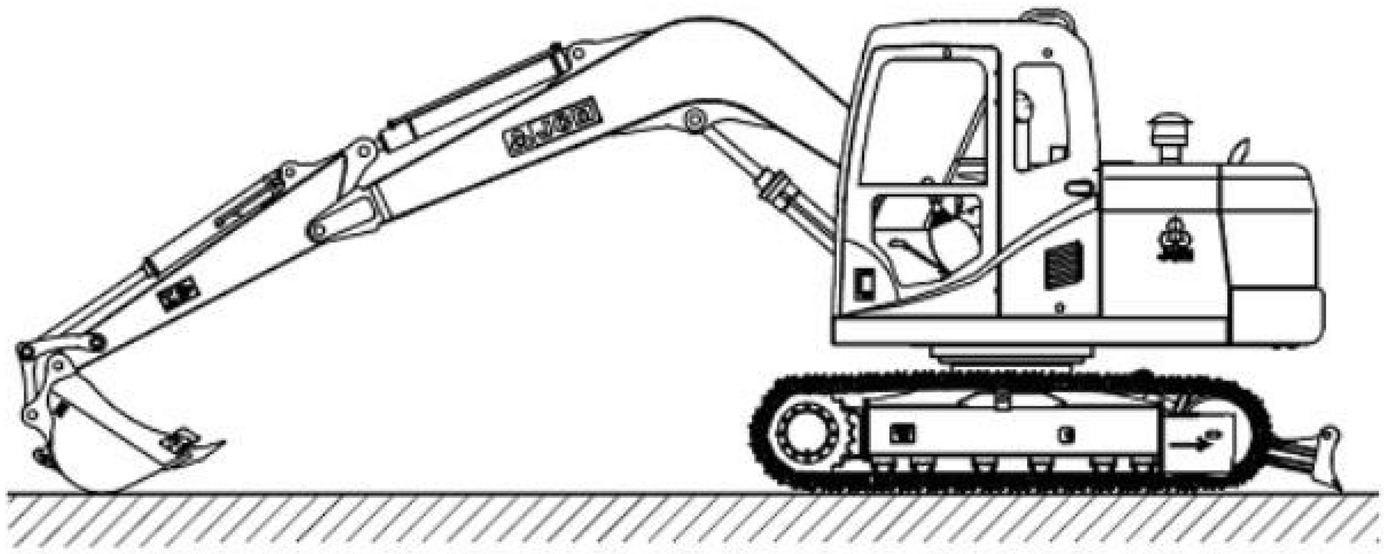


Warning! Never install fuses exceeding the capacity specified on the label. If a fuse in the same location repeatedly

burns, the cause of the fault must be investigated. Fuses protect electrical equipment from damage. If a fuse is corroded, has white powder on its surface, or is loose, check and promptly eliminate any related circuit faults. Easily blown fuses cannot be repaired and should be replaced immediately. Note: Only use original replacement fuses. When replacing fuses, always turn the ignition key to the "OFF" position first.

(9) Hydraulic system

Important! The hydraulic system must be kept clean when adding hydraulic oil. Check the hydraulic oil level daily.



1. Fully extend the bucket cylinder and fully retract the boom cylinder, lowering the working device to the ground as shown in the diagram above;

2. Stop the engine;

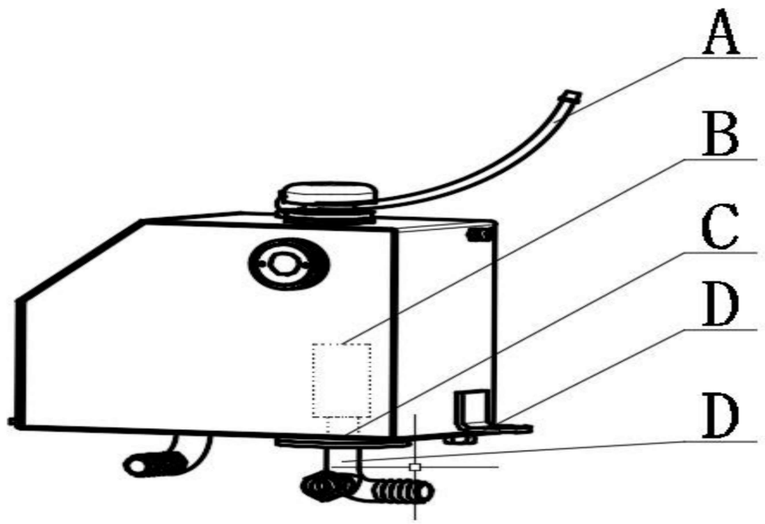
3. Lower the safety lock handle and move the left and right control handles several times in each direction to release any

residual pressure in the hydraulic system;

4. Raise the safety lock handle.

5. Open the right side cover of the lower structure and visually check the hydraulic oil level as shown in the diagram below;

6. If the oil level is in the center of the gauge, the level is normal. If the oil level is low, hydraulic oil must be added.



Change the hydraulic oil.

Change the hydraulic oil every 2000 hours.

Warning! Exercise caution when changing the hydraulic oil, as the high temperature can scald unprotected skin.

1. Rotate the upper structure so that the drain plug at the bottom of the hydraulic oil tank is positioned between the left and right tracks;

2. Fully retract the bucket cylinder and boom cylinder, and lower the working device to the ground. As shown in the attached diagram;

3. Stop the engine;

4. Lower the safety lock handle and move the left and right control handles several times in each direction to release residual pressure in the hydraulic system;

5. Raise the safety lock handle;

6. Release the internal pressure of the oil tank through the breather valve (A), (its upper part is installed near the seat cover);

7. Unscrew the suction flange cover (D);

8. Remove the O-ring (C) and the coarse filter (B);

9. Place a container under the drain plug (F);

10. Unscrew the drain plug (F);

11. Drain the hydraulic oil;

12. Tighten the drain plug (F);

13. Thoroughly clean the coarse filter (B) and reinstall it;

14. Refill with hydraulic oil and reinstall the cover;

15. Check the oil level on the level gauge;

Replace the pilot filter.

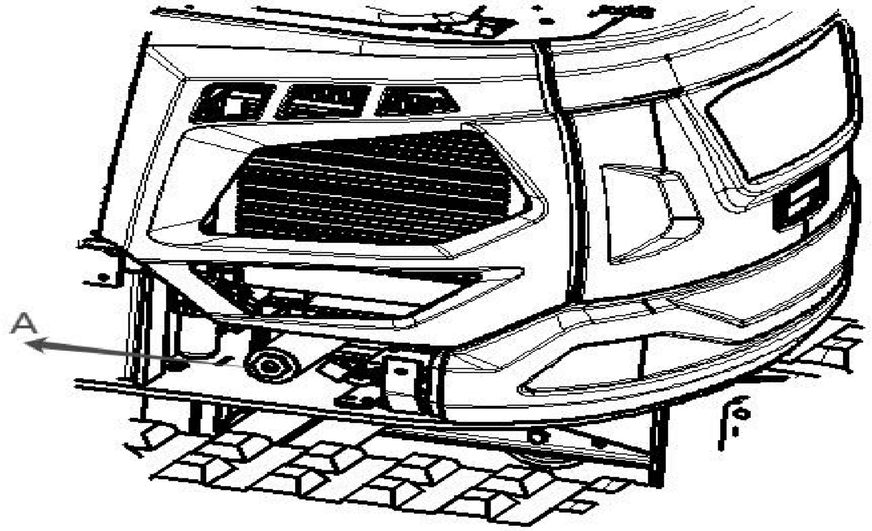
Replace the pilot filter (disposable high-pressure filter) after the first 250 hours of use, and then every 1000 hours.

1. Remove the lower left side cover; the pilot filter is located at point A below the radiator mount.

1. Place a container under the filter.

2. Remove the filter body.

3. Clean the pilot filter.



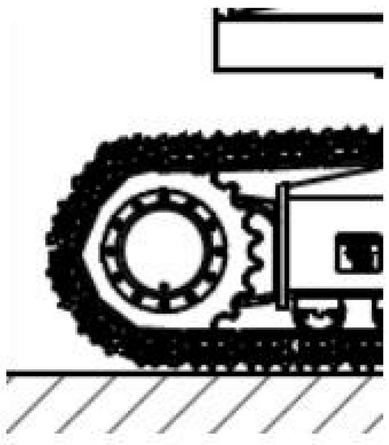
(10) Rotary drive

Overview

Important! This equipment's rotary motor uses self-lubricating hydraulic oil to ensure its normal operation.

Crawler Drive

Overview



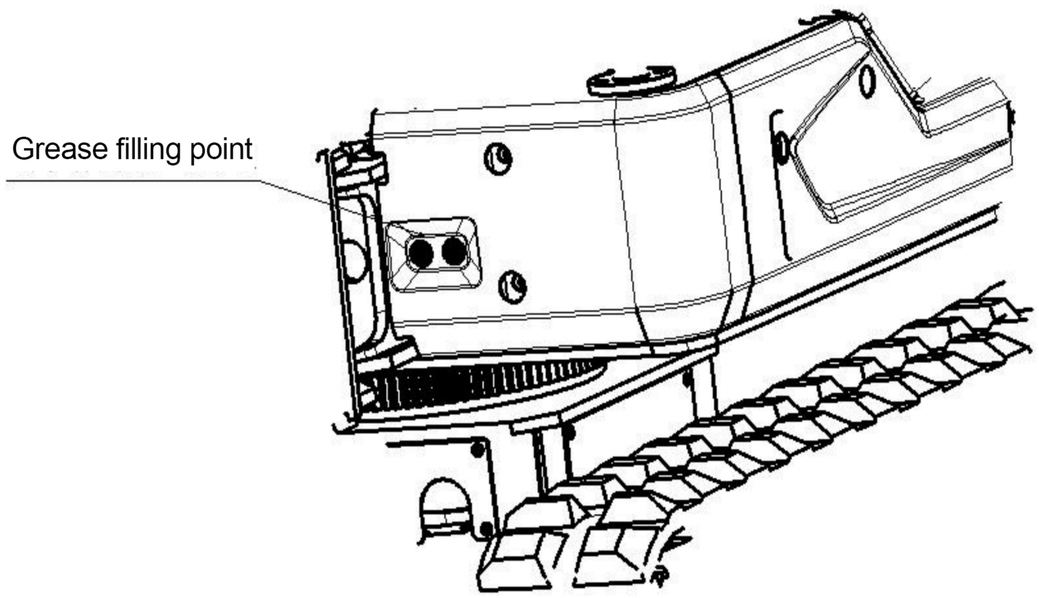
The track drive motor can be either a cycloidal hydraulic motor or a high-/low-speed piston motor (depending on user requirements).

The cycloidal hydraulic motor is an advanced end-face distribution structure hydraulic motor. It uses a stator-rotor pair with inserts, featuring high working pressure, high efficiency, good overall efficiency retention, and long service life.

The high-/low-speed piston travel motor is a travel device integrating the motor and reducer. It consists of a dual-displacement axial piston motor integrated within the reducer and a travel reducer.

(11) Add and replace grease

Lubricate the slewing bearing with grease



This grease filler is used for grease filling both inside and outside the slewing bearing.

Grease every 250 hours.

1. Park the machine on level ground.

2. Lower the bucket to the ground.

3. Turn the start key to the stop position.

4. Lift the safety lock handle and securely lock the system.

5. Inject grease through the two grease filler nozzles.

6. Start the engine, raise the bucket a few inches off the ground, and then rotate the superstructure one revolution.

7. Lower the bucket to the ground.

8. Repeat steps 3.

9. Inject grease into the slewing bearing until it overflows.

10. Be careful not to overfill.

11. After grease filling, remove any excess grease.

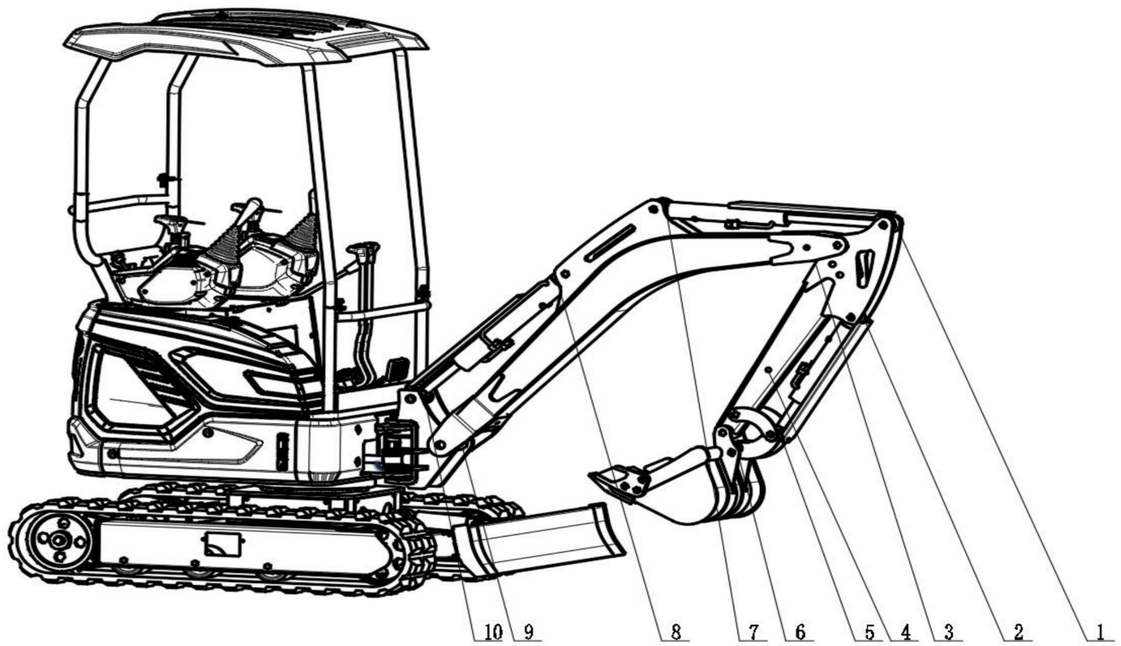
Lubricate the working device with grease.

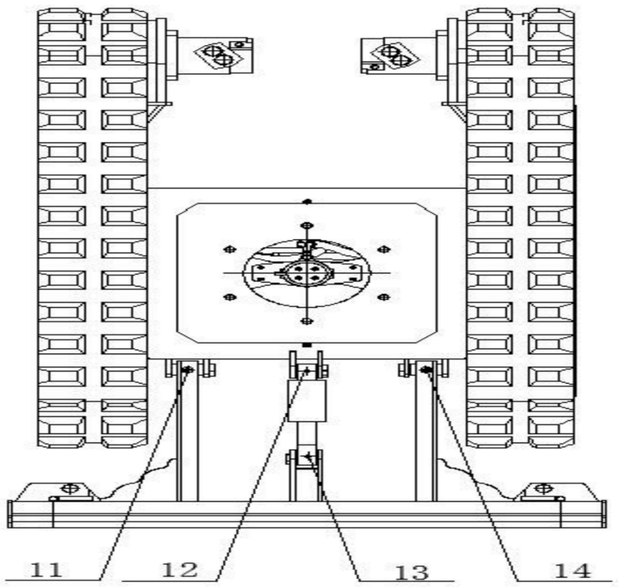
During the first 100 working hours of use, the new machine should be maintained every 10 working hours or daily.

After the first 100 working hours, the linkage system of the working device should be maintained every 50 working hours

or weekly.

Note: In harsh working environments (or after using a hydraulic hammer), mud, water, or abrasives may enter the bearings; therefore, the linkage system of the working device should also be maintained every 10 working hours or daily.





When manually adding grease, place the working device on the ground as shown in the diagram above and turn off the engine. Add grease manually or using an electric grease gun through the grease nozzle. After adding grease, remove any excess grease. After working in water, regardless of the grease refill cycle, immediately apply new grease to submerged components, such as bucket pins.

1. Lubrication points on the two mounting pins at both ends of the boom

2. Lubrication point on the front pin of the bucket cylinder

3. Lubrication point on the front pin of the boom

4. Lubrication point on the rear pin of the bucket cylinder

5. Lubrication point on the pin connecting the boom and the arm

6. Lubrication point on the front pin of the boom cylinder

7. Lubrication point on the rear pin of the boom cylinder

8. Lubrication point on the front pin of the arm cylinder

9. Lubrication point on the rear pin of the arm cylinder

10. Lubrication point on the pin connecting the arm and the side swing head

11. Lubrication point on the pin connecting the bulldozer blade and the chassis

12. Lubrication point on the rear pin of the bulldozer cylinder

13. Lubrication point on the front pin of the bulldozer cylinder

(12) Track tension

Check and Adjust Track Tension

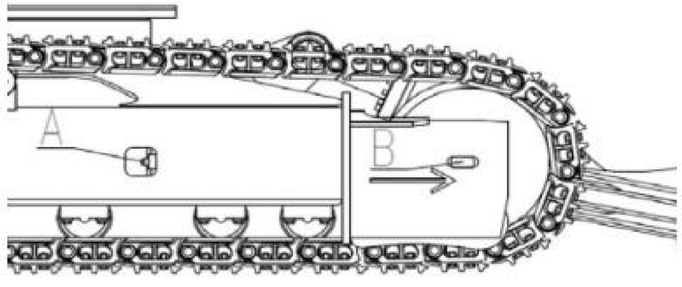
Check track tension every 50 hours.

To check track tension, the track must be lifted off the ground. Extreme care must be taken during measurement to avoid dropping or shifting it.

Wear of track connecting pins and bushings typically varies depending on working conditions and soil characteristics. Track tension should be checked frequently and maintained at the specified value. When working on wet sand or clay, sand and clay will adhere between the moving parts of the chassis, hindering proper meshing, causing interference and creating heavy loads. Abrasive particles in the material can significantly accelerate wear on sprockets, pins/bushings, rollers, idlers, and track connectors, increasing track load and tension. Often, the packing effect is uncontrollable; only frequent cleaning/removal of the packing material is possible.

Therefore, the undercarriage should be thoroughly cleaned, at least once a day or more, depending on the soil conditions of the work site.

examine



1. Use the boom and stick to lift the tracks. Then, slowly operate the handles.

2. Through window A in the diagram, use a wrench to adjust the driven wheel adjusting nut until the track tension is normal.

If it is necessary to loosen the tracks, use a wrench to adjust the driven wheel adjusting nut through window A in the diagram until the tracks are loose.

Increasing Track Tension

1. To check and adjust the track tension, move the machine forward and backward.

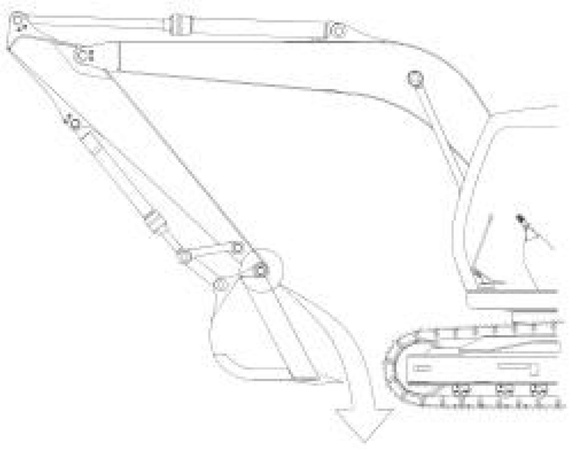
2. Check the tension again. If the tension is incorrect, readjust it.

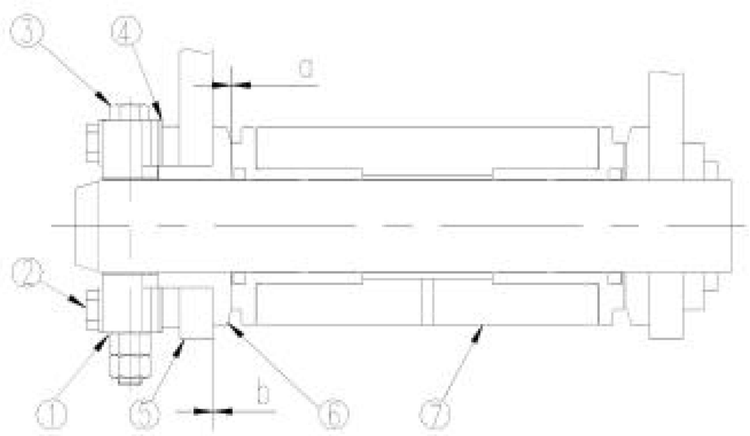
(13) Adjustment of bucket clearance

Warning! Movement of the working device due to misoperation during clearance adjustment is extremely dangerous. The working device must be placed in a stable position, the engine turned off, and the safety locking handle raised.

Clear Adjustment

Place the working device as shown in the diagram below:





1. Loosen all four bolts ②, ③, and ①.

2. Remove the shim ④, which has the same thickness as gap a. Shim ④ can be either 0.5mm or 1mm thick. If the free gap a is less than 0.5mm, no adjustment is needed.

3. Tighten bolts ② and ③. After the above adjustments, gap b increases while gap a is eliminated. In the diagram, ⑤ represents the bucket, ⑥ the sleeve, and ⑦ the boom.

Replace the bucket teeth

Replace the bucket teeth before the tooth holder is damaged.

Warning! When changing bucket teeth, always lower the bucket to the ground for optimal working position and turn off the engine. Place a pad under the bucket, then lower the bucket to keep it level. Turn off the engine and lift the safety lock handle to securely lock the system.

Warning! Flying debris is common during replacement operations, so wear safety goggles, gloves, and other protective gear.

Replacing Bucket Teeth

1. Place a metal bar on the pin head and tap the bar with a hammer to knock the pin out. Remove the bucket teeth.

2. Note: Use a metal bar with a diameter slightly smaller than the pin.

3. Clean the mounting surface. Install the new bucket teeth into the tooth holder, push the pin in partially by hand, and then use a hammer to tap the pin in to lock it in place, thus installing the bucket teeth into the bucket.

(14) Lubrication

OverviewLubrication is a crucial part of preventative maintenance. Properly lubricating machines can significantly extend the lifespan of bearings and pins. Lubrication diagrams can simplify the lubrication process and reduce the risk of forgetting to lubricate points.

Lubrication serves two main purposes:

- Supplying grease to bearings to reduce wear between pins and bearing bushings.
- Replacing old, dirty grease.

Important! Before adding grease, clean the grease fitting and grease gun to avoid introducing sand and dirt particles.

Inspection, Oil Change, and Lubrication

Measure	Time period
Check: Engine oil level Coolant level Drain from oil-water separator Battery electrolyte level Hydraulic oil level Tightness of track shoe bolts Alternator belt tension	Every day = every 10 hours

Measure	Time period
After completing routine maintenance: Check: Track tension Lubrication: Add grease to the working device Adjustment: Check and adjust track tension	Every day = every 50 hours

Measure	Time period
Every 100 hours, after completing the scheduled 50-hour maintenance: Clean: (if necessary) Sediment in the fuel tank	Every 100 hours

Measure	Time period
After completing daily, 50, 100, or 200-hour maintenance: Check: Fan belt tension Travel motor oil level Lubrication: Add grease to the slewing bearing	Every 250 hours

Measure	Time period
After completing daily, 50, 100, 200, or 250-hour maintenance: Check: Coolant Grease for the slewing bearing gear Replace: Engine oil and filter Hydraulic oil suction filter (replace after 250 hours of use) Clean: Radiator, hydraulic oil cooler, and condenser fins	Every 500 hours
Measure	Time period

After completing daily or 50, 100, 200, 250, and 500-hour maintenance: Replace: Fuel filter Oil-water separator Hydraulic components of the pilot filter (First replacement after 250 hours of use) (First replacement after 500 hours of use) Clean: Suction filter (hydraulic oil tank)	Every 1000 hours

Measure	Time period
After completing daily, 50, 100, 200, or 250-hour maintenance: Check: Coolant Grease for the slewing bearing gear Replace: Engine oil and filter Hydraulic oil suction filter (replace after 250 hours of use) Clean: Radiator, hydraulic oil cooler, and condenser fins	Every 500 hours
Measure	Time period

After completing daily or 50, 100, 200, 250, 500, and 1000-hour maintenance: Replace: Air filter main element Air filter protective element Hydraulic oil Travel motor oil (replace after 500 hours of use) Coolant Clean: Hydraulic oil tank breather valve (if necessary)	Every 2000 hours

Measure	Time period
After completing daily, 50, 100, 200, or 250-hour maintenance: Check: Coolant Grease for the slewing bearing gear Replace: Engine oil and filter Hydraulic oil suction filter (replace after 250 hours of use) Clean: Radiator, hydraulic oil cooler, and condenser fins	Every 500 hours
Measure	Time period

After completing daily or 50, 100, 200, 250, 500, 1000, or 2000-hour maintenance: Replace: Coolant	Every 3000 hours